

TRUFORM®

PROFILES

GORDON®

ARCHITECTURAL+ENGINEERED SOLUTIONS

INTERIOR



EXTERIOR



ACOUSTICAL



GORDON®

ARCHITECTURAL + ENGINEERED SOLUTIONS



DATA CENTER



CLEANROOM



SECURITY

www.gordon-inc.com

TFP.04.20.26

TRUFORM®
PROFILES

- DRYWALL
- PROJECTION
- WALLCOVERING
- CEILING
- MILLWORK
- STUCCO



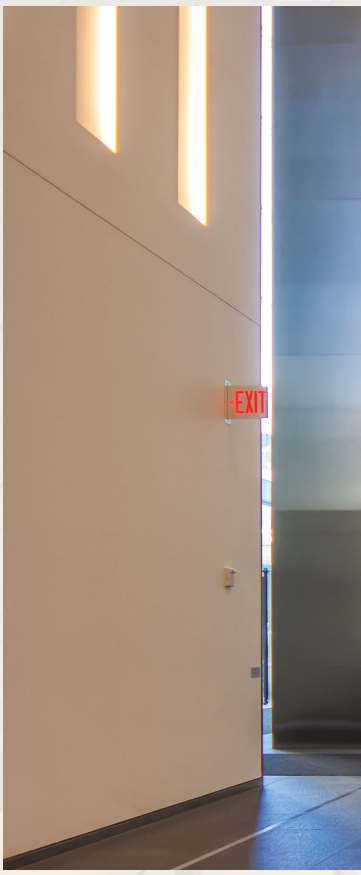



ABOUT GORDON, INC.

Founded in 1964, Gordon delivers innovative architectural solutions for interior and exterior applications with next-level technologies to meet complex challenges.
Our people, passion and experience allows us to create award-winning solutions for multiple markets.

GORDON®
ARCHITECTURAL+ENGINEERED SOLUTIONS




20
TO
35
B
20
TO
35
A



REVEAL V

Drywall Reveal V (DRV) is a vertical or horizontal reveal used to develop a chiseled stone block effect.

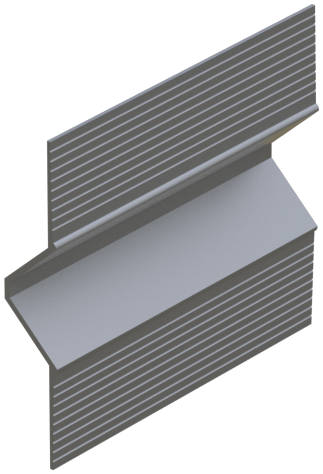

PART #	A DEPTH	B WIDTH
DRV 50-75	1/2"	3/4"
DRV 50-100	1/2"	1"

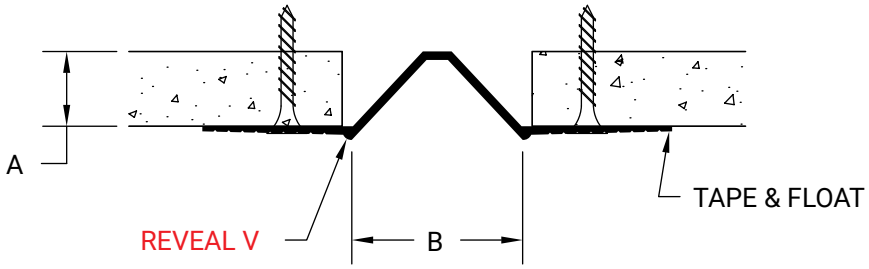

REVEAL WALL ANGLE

Drywall Reveal Wall Angle (DRWA) creates a reveal at ceiling to wall application.

PART #
DRWA 50-50

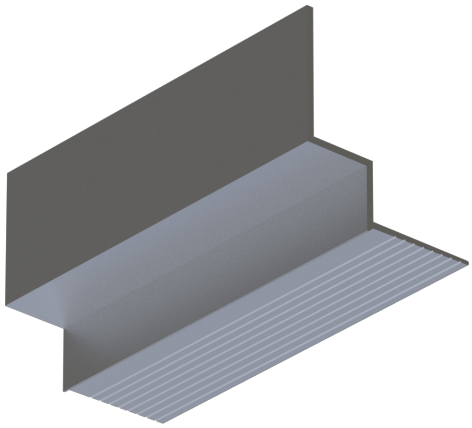

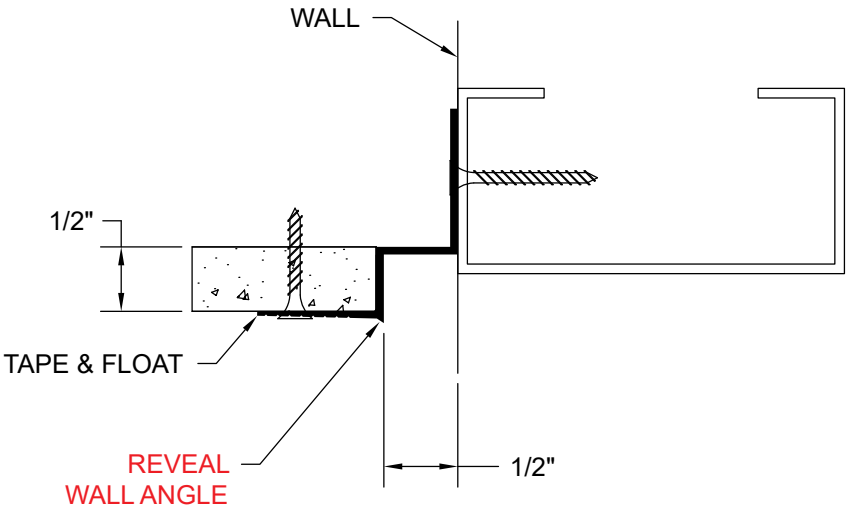

PROJECTION PROFILES

TRIMS

Edge
Pg 35

Reveal
Pg 36

Corner
Pg 37

Termination
Pg 38





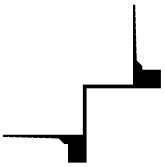



Midwall
Pg 39



WALLCOVERING PROFILES

TRIMS

Edge Trim
Pg 40



Midwall
Pg 41



Outside Corner
Pg 42

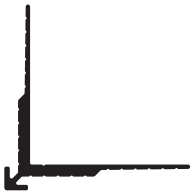

Tuck
Pg 43



Tuck Corner
Pg 44



ACOUSTICAL

Straight Transition
Pg 45



Inside Corner
Pg 46

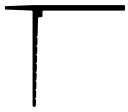

Reveal Ceiling
Pg 47

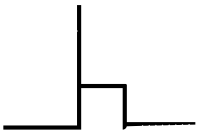

Reveal Wall Angle
Pg 48

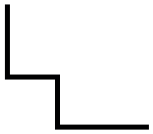

Wall Angle
Pg 49



Contura™
Pg 50



Vantage Point®
Pg 51

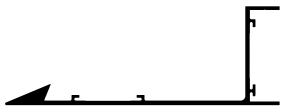

Contura™ Transition
Pg 52



Contura™ Drywall Flange
Pg 53



CEILING TRIM PROFILES

DRYWALL

Contura™ Drywall
Pg 54



Vantage Point® Light Cove
Pg 55

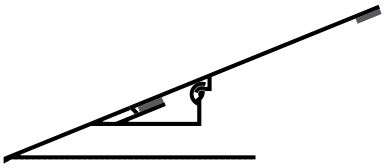

Drywall Expansion Joint
Pg 56



Perimeter Expansion Joint
Pg 57



Acoustical Expansion Joint
Pg 58

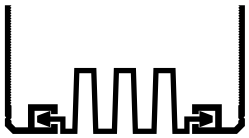

MILLWORK PROFILES

CAPTURE REVEALS

Reveal
Pg 59

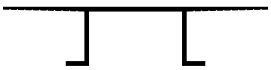

Inside Corner
Pg 60

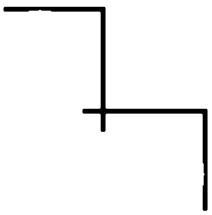

Outside Corner
Pg 61

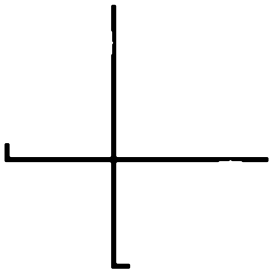

Outside Arrow Corner
Pg 62

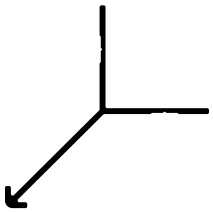

Base
Pg 63



U Channel
Pg 64



Edge Trim
Pg 65



TRIMS

Bar Outside Corner
Pg 66



Bar Inside Corner
Pg 67



Bar Base
Pg 68



Rail Moulding
Pg 69

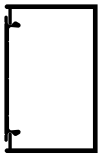

Z-Clip
Pg 70



Bar Trim
Pg 71



STUCCO PROFILES

REVEALS

Reveal F
Pg 72

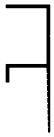

Min Reveal
Pg 73

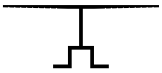

Reveal
Pg 74



Soffit Reveal
Pg 75

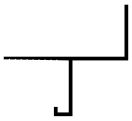

TRIMS

Edge Trim
Pg 76



CORNERS

Arrow Outside Corner
Pg 77

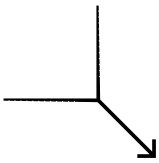

Soffit Corner
Pg 78



Soffit Reveal Corner
Pg 79

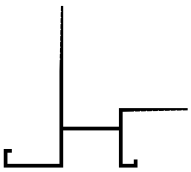

Outside Corner
Pg 80

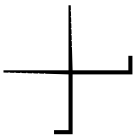

SOFFIT VENTS

Soffit Vent
Pg 81



REVEAL Z

Drywall Reveal Z (DRZ) is a vertical or horizontal reveal used to trim around doors and windows or against dissimilar materials.

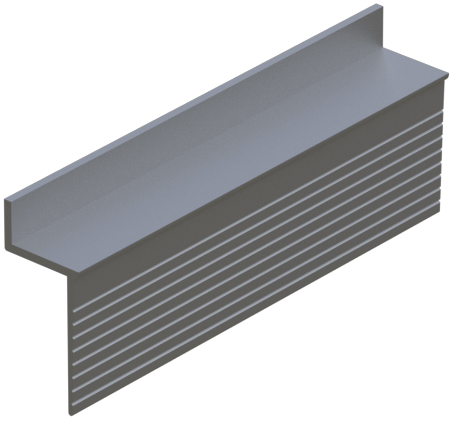

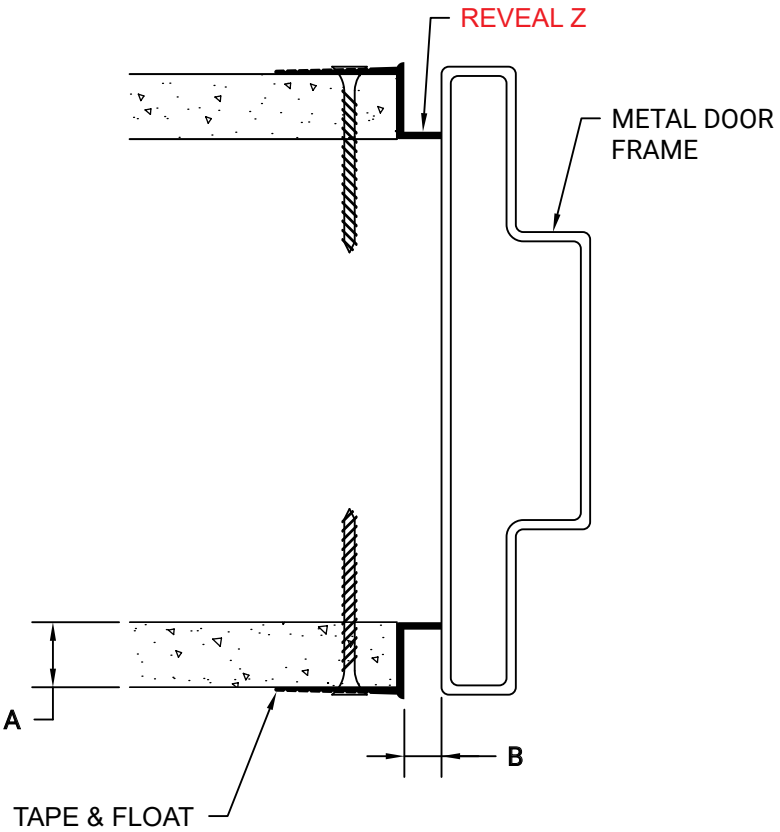

PART #	A DEPTH	B WIDTH
DRZ 25-25	1/4"	1/4"
DRZ 50-25	1/2"	1/4"
DRZ 50-375	1/2"	3/8"
DRZ 50-50	1/2"	1/2"
DRZ 50-75	1/2"	3/4"
DRZ 50-100	1/2"	1"
DRZ 50-200	1/2"	2"
DRZ 50-400	1/2"	4"
DRZ 625-25	5/8"	1/4"
DRZ 625-375	5/8"	3/8"
DRZ 625-50	5/8"	1/2"
DRZ 625-625	5/8"	5/8"
DRZ 625-75	5/8"	3/4"
DRZ 625-100	5/8"	1"
DRZ 625-1250	5/8"	1-1/4"
DRZ 625-200	5/8"	2"
DRZ 625-250	5/8"	2-1/2"
DRZ 625-300	5/8"	3"
DRZ 625-400	5/8"	4"
DRZ 625-600	5/8"	6"
DRZ 100-100	1"	1"

REVEAL F

Drywall Reveal F (DRF) is a vertical or horizontal reveal used to trim around doors and windows or against dissimilar materials.

PART #	A DEPTH	B WIDTH
DRF 50-50	1/2"	1/2"
DRF 50-75	1/2"	3/4"
DRF 50-100	1/2"	1"
DRF 625-50	5/8"	1/2"
DRF 625-625	5/8"	5/8"
DRF 625-75	5/8"	3/4"
DRF 625-100	5/8"	1"
DRF 625-150	5/8"	1-1/2"

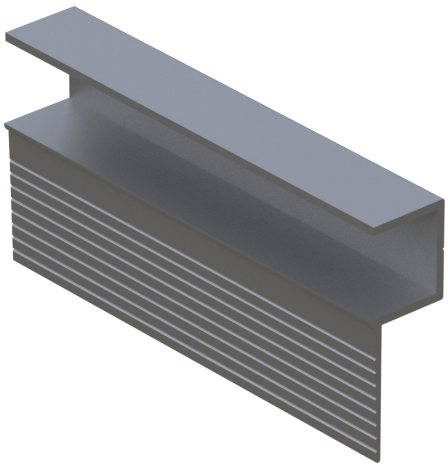

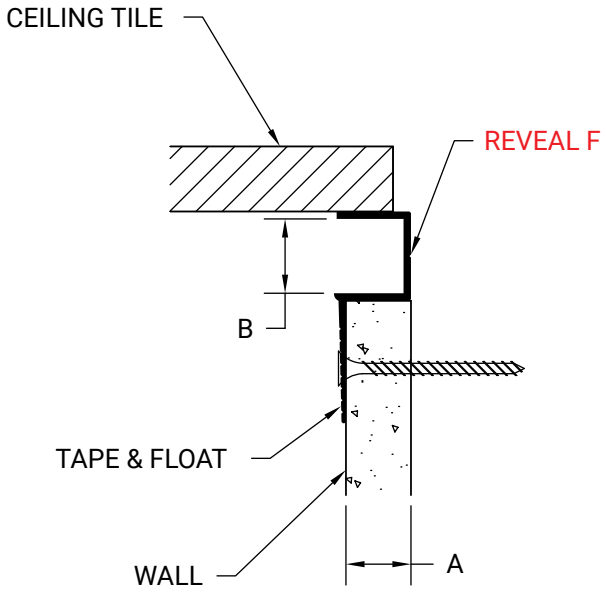

REVEAL F CEILING

Drywall Reveal F Ceiling (DRFC) is a vertical or horizontal reveal used to transition from wall to ceiling or wall to wall.

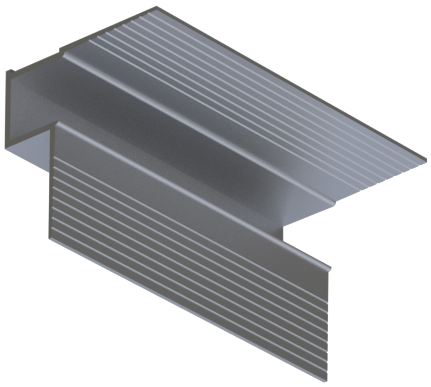

PART #
DRFC 50-50

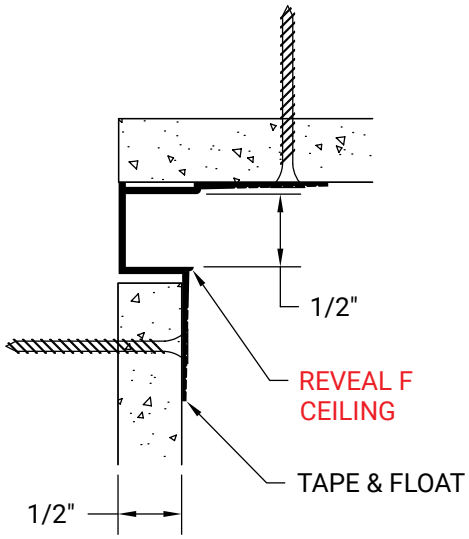

REVEAL

Drywall Reveal (DR) is a vertical or horizontal reveal used to provide reveal or breaks in long runs of drywall.

ACCESSORIES

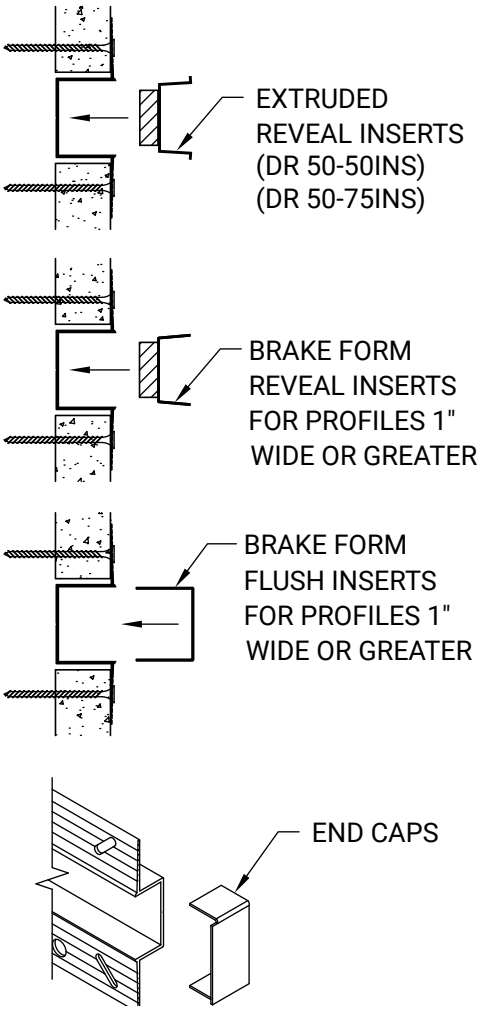

PART #	A DEPTH	B WIDTH
DR 50-25	1/2"	1/4"
DR 50-50	1/2"	1/2"
DR 50-625	1/2"	5/8"
DR 50-75	1/2"	3/4"
DR 50-100	1/2"	1"
DR 50-150	1/2"	1-1/2"
DR 50-200	1/2"	2"
DR 50-300	1/2"	3"
DR 50-400	1/2"	4"
DR 625-25	5/8"	1/4"
DR 625-375	5/8"	3/8"
DR 625-50	5/8"	1/2"
DR 625-625	5/8"	5/8"
DR 625-75	5/8"	3/4"
DR 625-100	5/8"	1"
DR 625-150	5/8"	1-1/2"
DR 625-200	5/8"	2"
DR 625-250	5/8"	2-1/2"
DR 625-300	5/8"	3"
DR 625-400	5/8"	4"

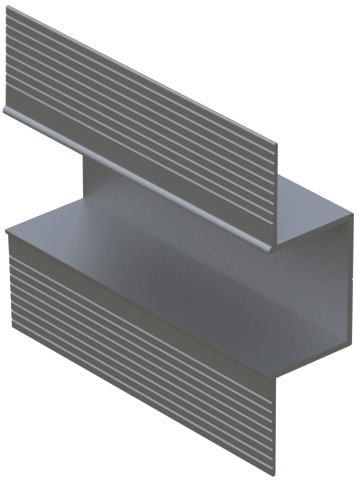

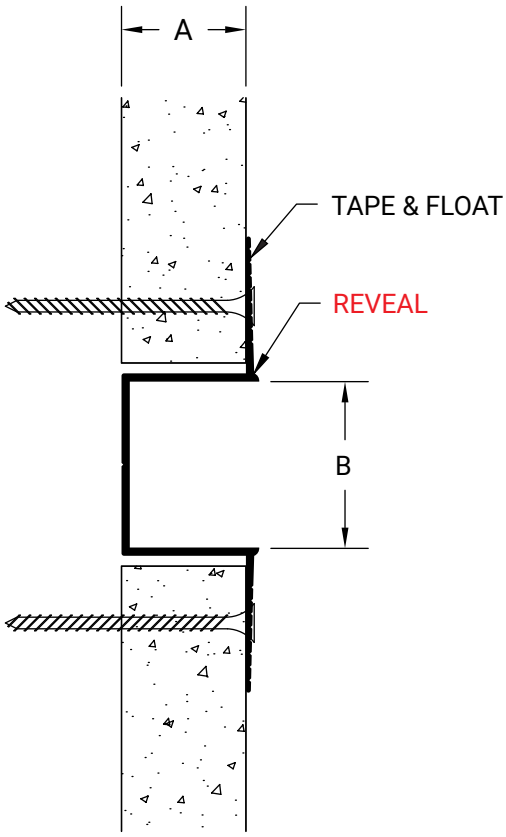

REVEAL V

Drywall Reveal V (DRV) is a vertical or horizontal reveal used to develop a chiseled stone block effect.

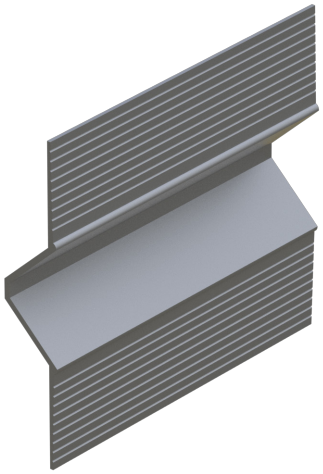

PART #	A DEPTH	B WIDTH
DRV 50-75	1/2"	3/4"
DRV 50-100	1/2"	1"

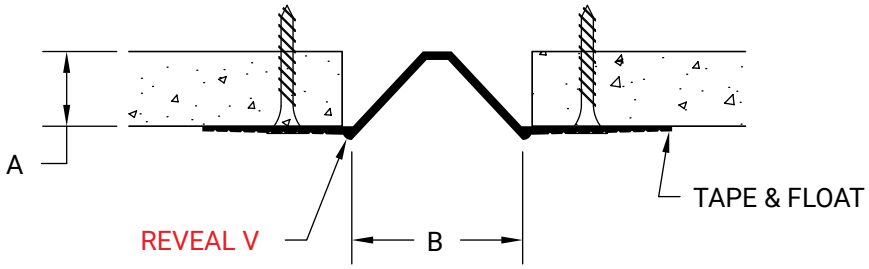

REVEAL WALL ANGLE

Drywall Reveal Wall Angle (DRWA) creates a reveal at ceiling to wall application.

PART #
DRWA 50-50

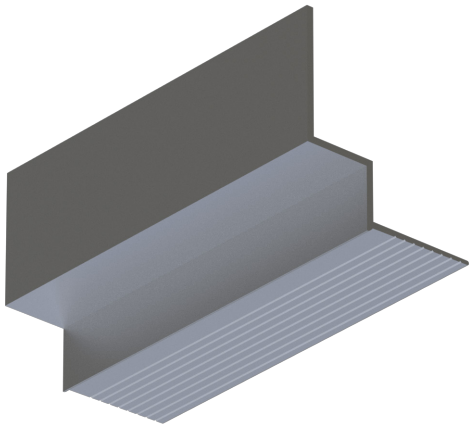

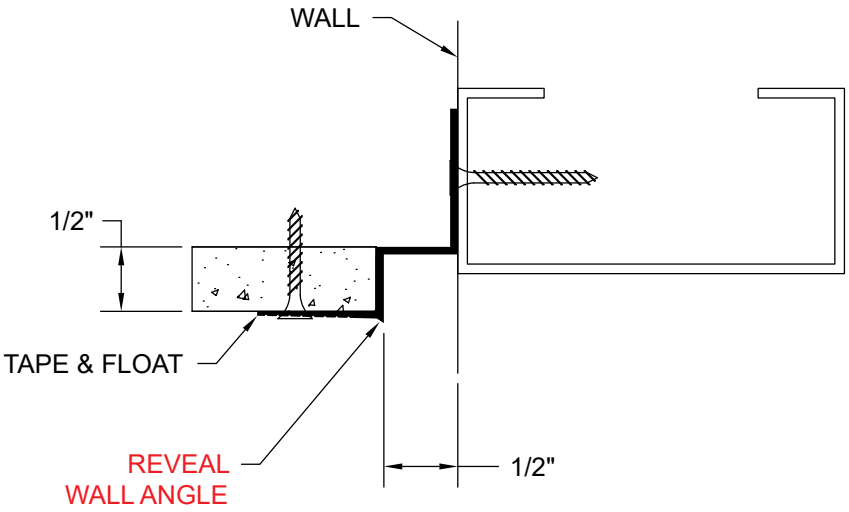

POCKET TRIM

Drywall Pocket Trim (DPT) is used at perimeter of ceiling to create a pocket.



PART #
DPT 500

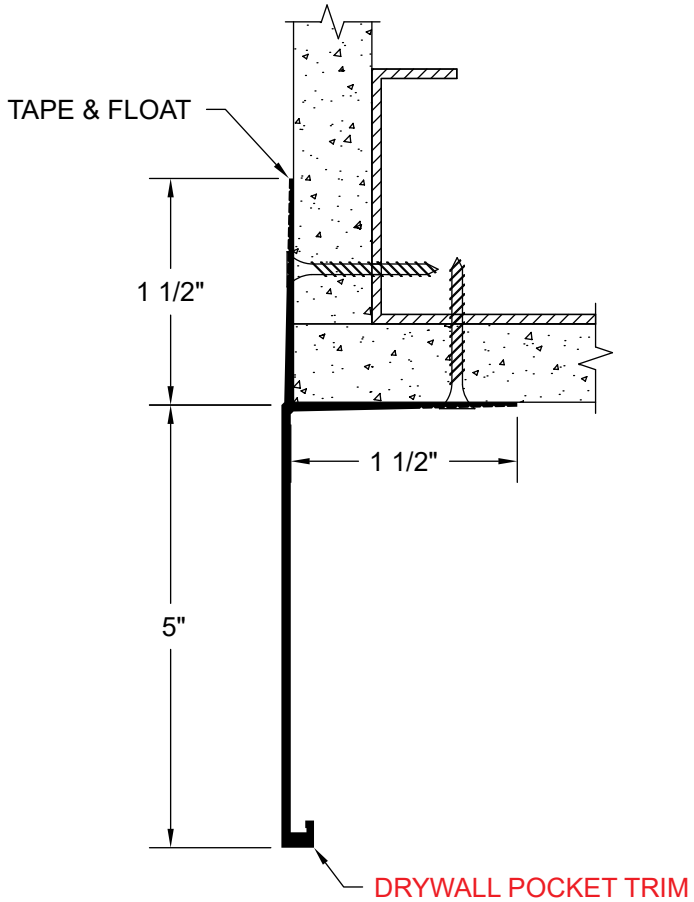

REVEAL L

Drywall Reveal L (DRL) is an edge trim used as a termination in multi-layer drywall applications.

PART #	A DEPTH
DRL 50	1/2"
DRL 625	5/8"
DRL 100	1"
DRL 1250	1-1/4"
DRL 150	1-1/2"
DRL 2125	2-1/8"
DRL 300	3"

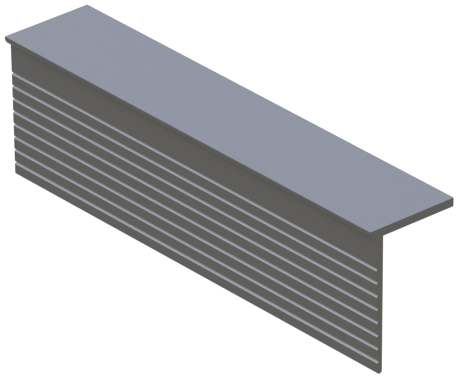

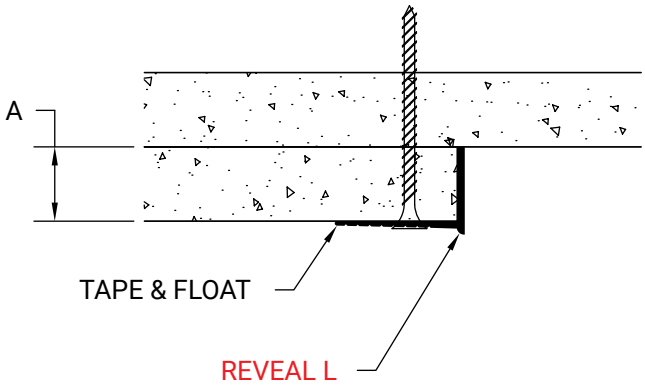

END CAP

Drywall Trim End Cap (DTEC) is a vertical or horizontal end cap used to terminate the end of a wall.

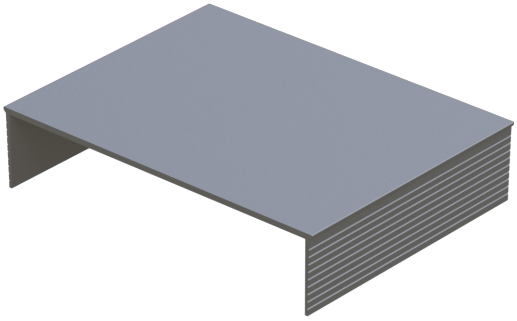

PART #	A DEPTH	B DEPTH
DTEC 3750	3-3/4"	3-15/16"
DTEC 4875	4-7/8"	5-1/16"
DTEC 6125	6-1/8"	6-5/16"
DTEC 7250	7-1/4"	7-7/16"

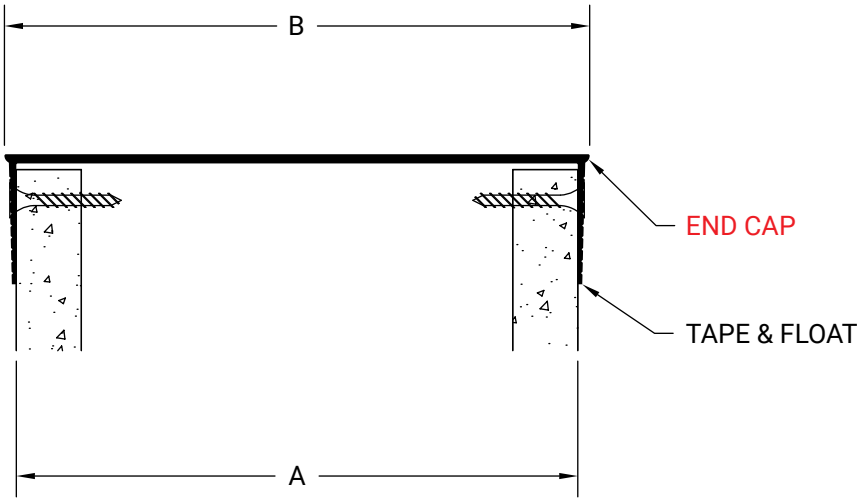

END CAP REVEAL

Drywall Trim End Cap Reveal (DTECR) is a vertical or horizontal end cap used to terminate the end of a wall and create a reveal.

PART #
DTECR 4875

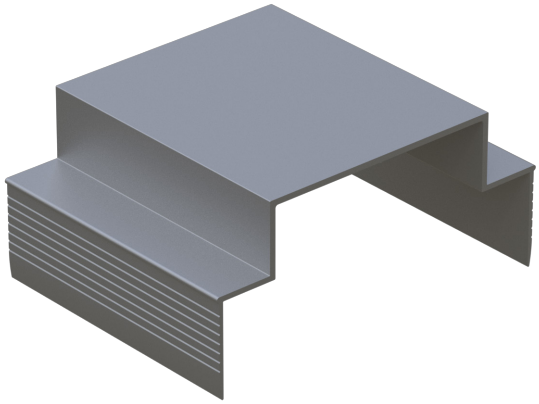

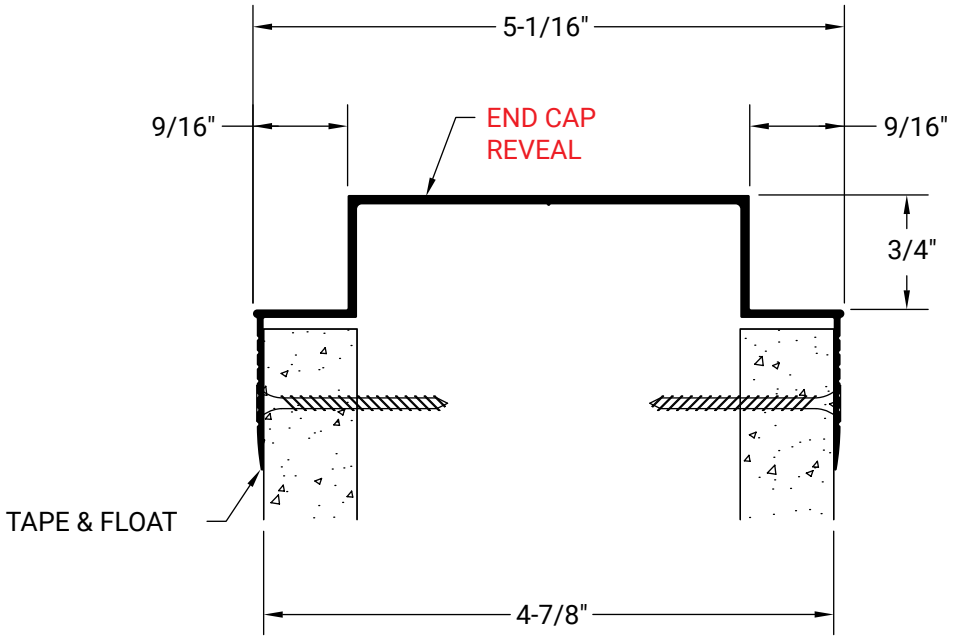

KNIFE EDGE TERMINATION

Drywall Knife Edge Termination (DKET) is an edge trim used as termination in multi-layer drywall applications.

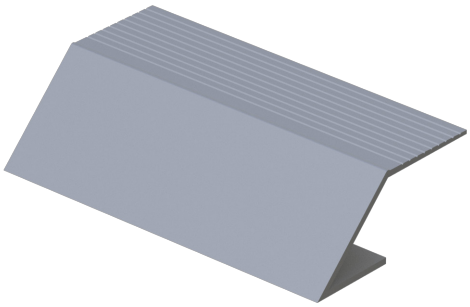

PART #
DKET 625

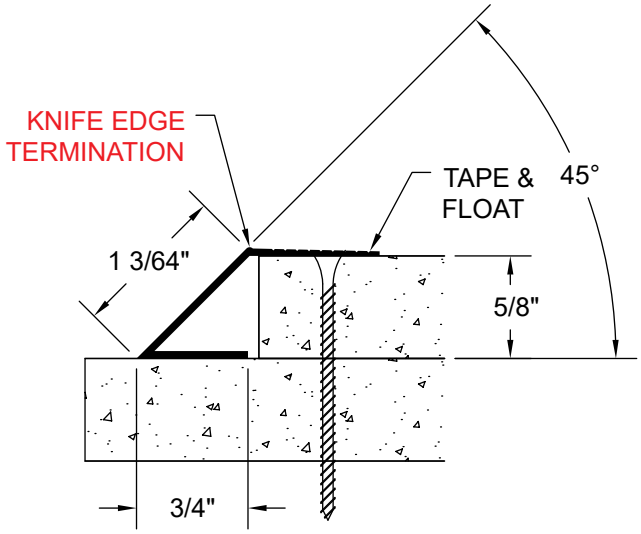

BULLNOSE END CAP

Drywall Bullnose End Cap (DBEC) is a vertical or horizontal end cap used to terminate the end of a wall.

PART #	B WIDTH	RADIUS
DBEC 4625	4-5/8"	2-5/8"
DBEC 4875	4-7/8"	2-5/8"
DBEC 700	7"	3-3/4"
DBEC 725	7-1/4"	3-3/4"

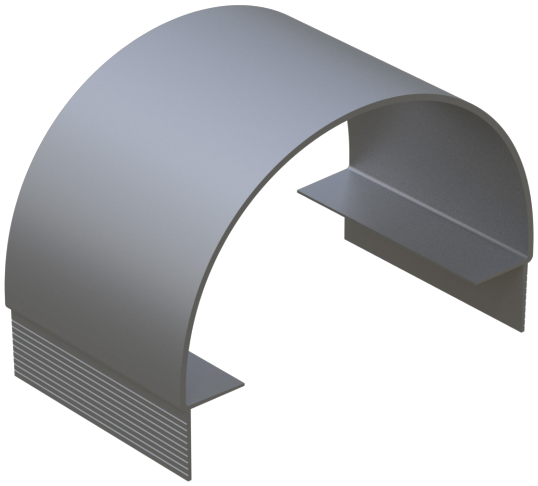

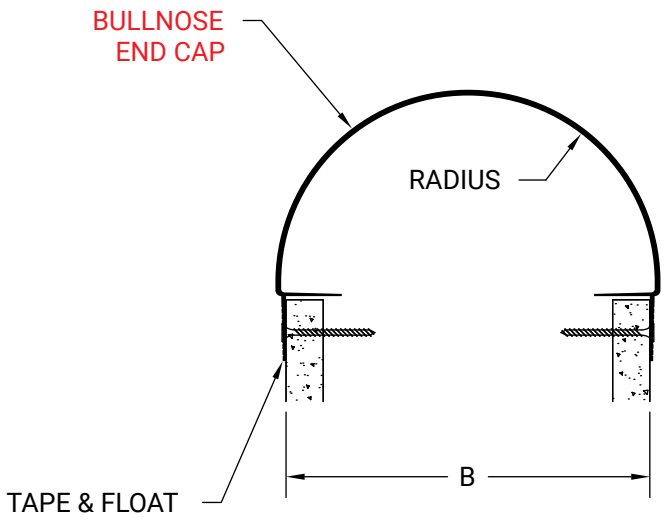

HIGH STRENGTH CORNER TRIM

High Strength Corner Trim (HSCT) is used to create a high strength corner.

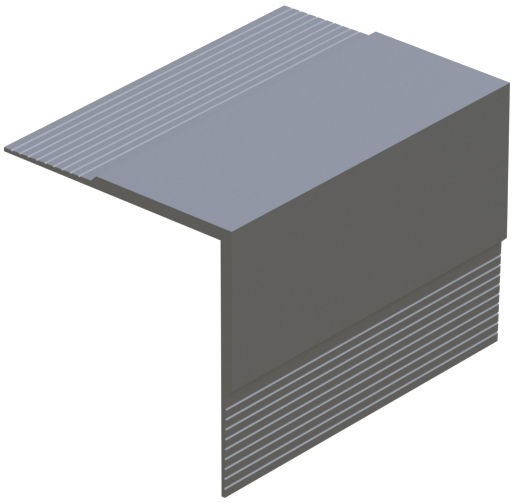

PART #	B WIDTH
HSCT 375	3/8"
HSCT 1250	1-1/4"

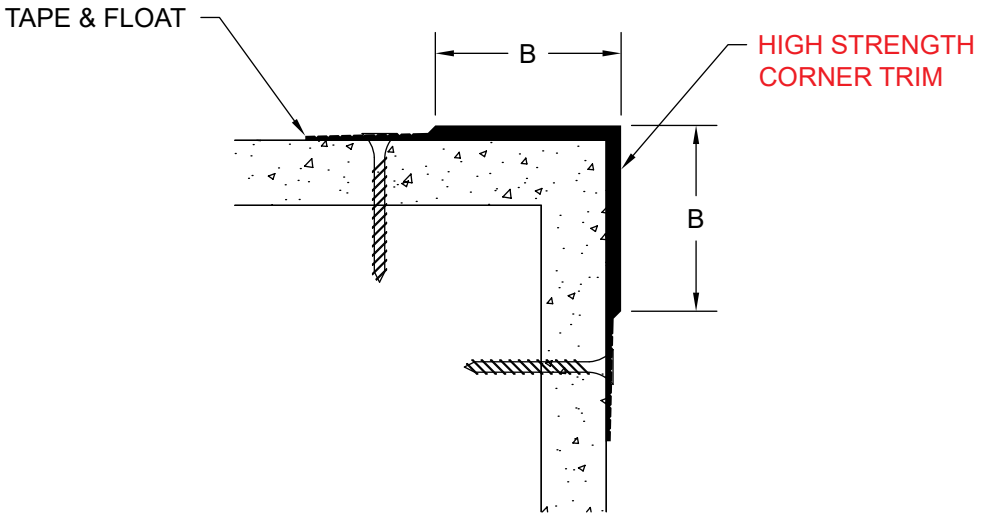

STEPPED CORNER

Drywall Stepped Corner (DSC) is used to create a reveal on an outside corner.

PART #	A DEPTH
DSC 25	1/4"
DSC 625	5/8"

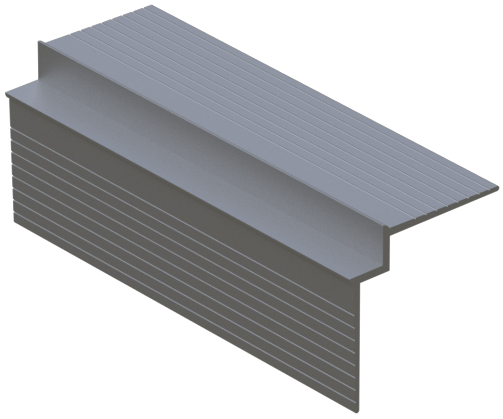

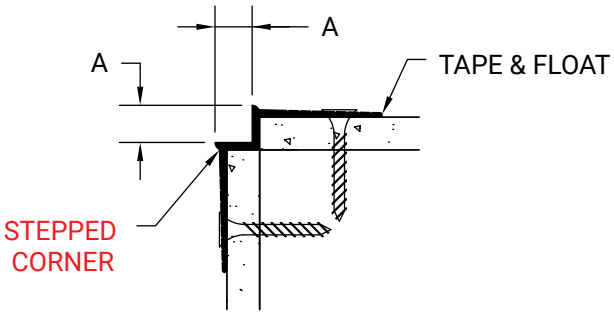

KNIFE EDGE CORNER

Drywall Knife Edge Corner (DKEC) can be used vertically or horizontally for crisp and exact angles.

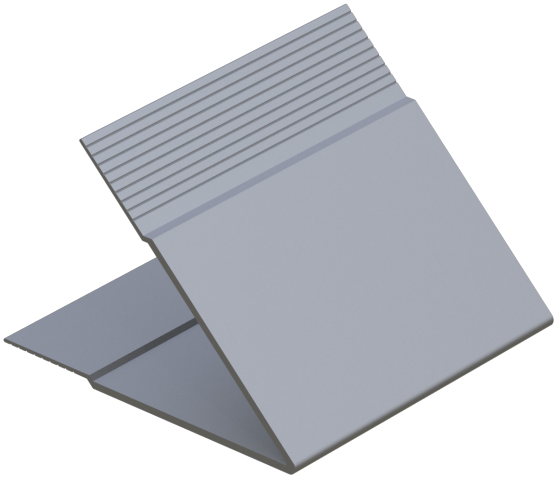

PART #	ANGLE
DKEC 30	30º
DKEC 45	45º
DKEC 60	60º

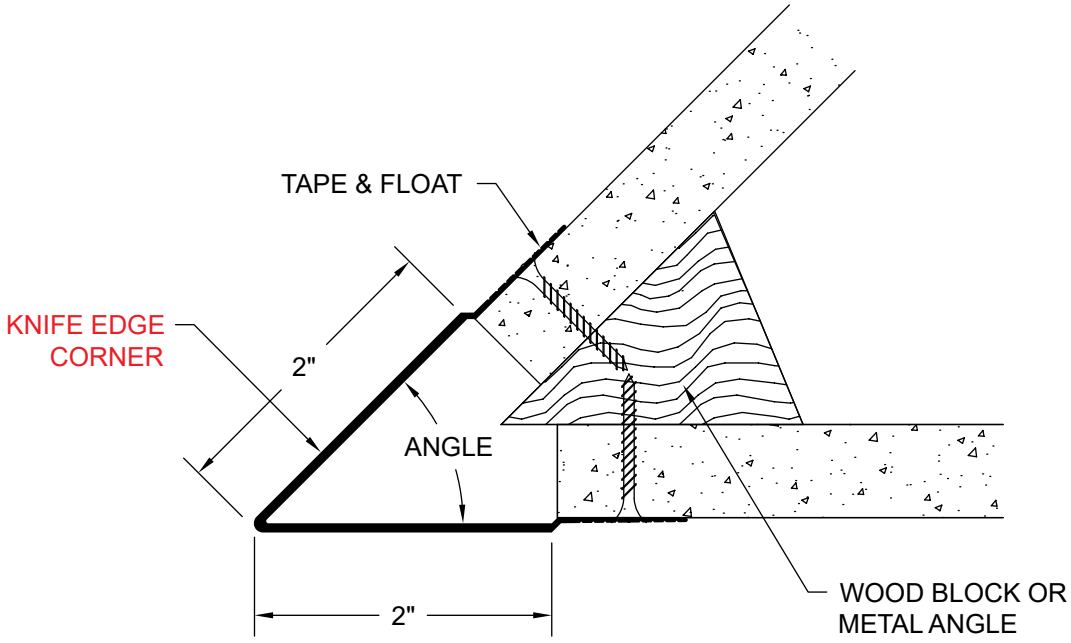

BULLNOSE CORNER

Drywall Bullnose Corner (DBC) is used to create vertical or horizontal radius outside corners.

PART #	RADIUS
DBC 75	3/4"
DBC 250	2-1/2"
DBC 300	3"
DBC 400	4"
DBC 600	6"

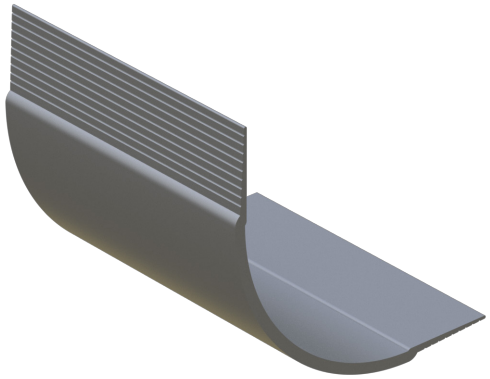

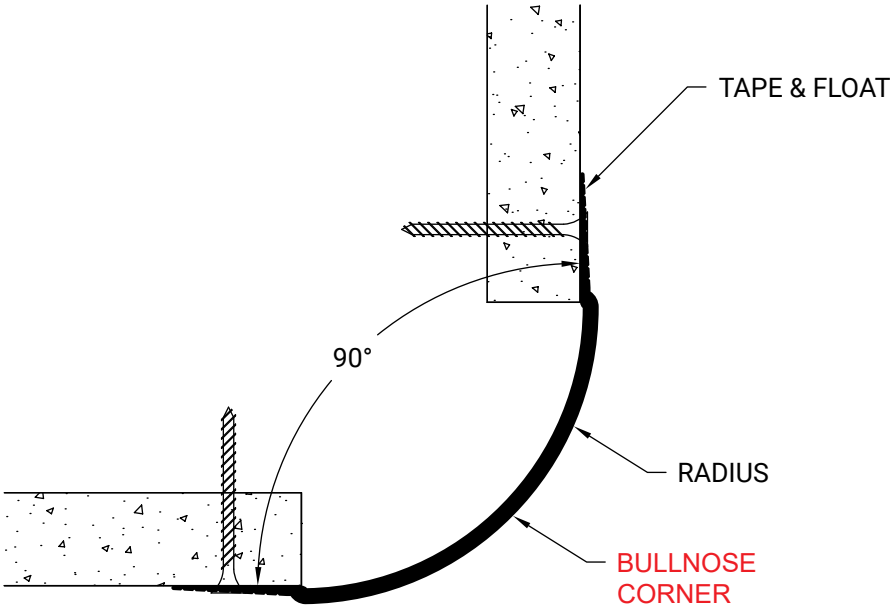

COVE INSIDE CORNER

Drywall Cove Inside Corner (DCIC) is a trim used to create vertical or horizontal coved inside corners.

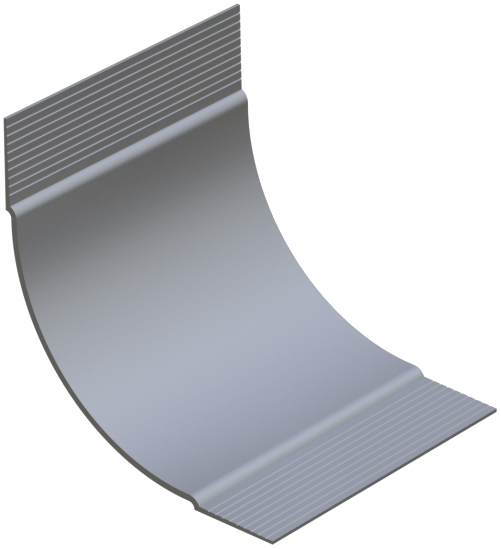

PART #	RADIUS
DCIC 150	1-1/2"
DCIC 200	2"
DCIC 300	3"
DCIC 400	4"
DCIC 600	6"

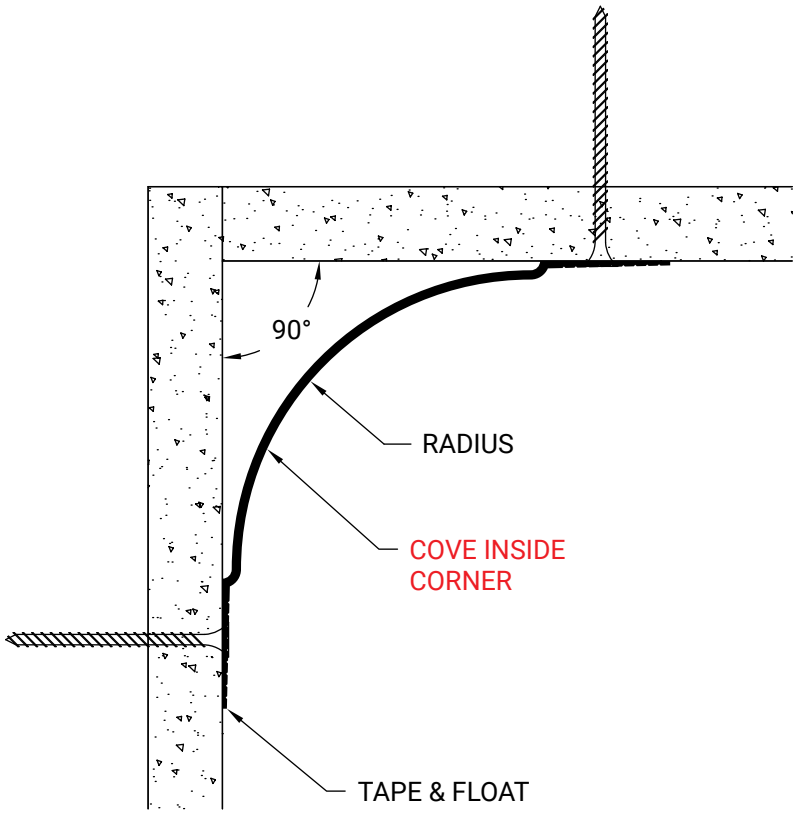

REVEAL BASE

Drywall Reveal Base (DRB) is used at the bottom of a wall to create a durable base.

PART #	A DEPTH	B HEIGHT
DRB 50-75	1/2"	3/4"
DRB 50-100	1/2"	1"
DRB 50-200	1/2"	2"
DRB 50-250	1/2"	2-1/2"
DRB 50-400	1/2"	4"
DRB 625-75	5/8"	3/4"
DRB 625-100	5/8"	1"
DRB 625-125	5/8"	1-1/4"
DRB 625-200	5/8"	2"
DRB 625-250	5/8"	2-1/2"
DRB 625-300	5/8"	3"
DRB 625-400	5/8"	4"
DRB 625-600	5/8"	6"

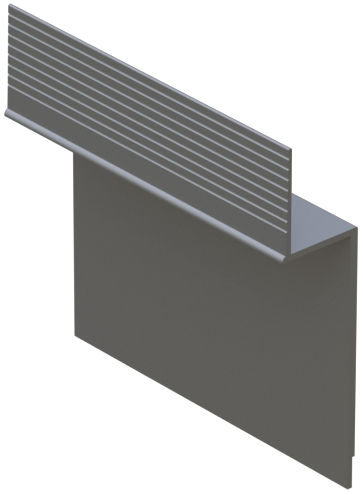

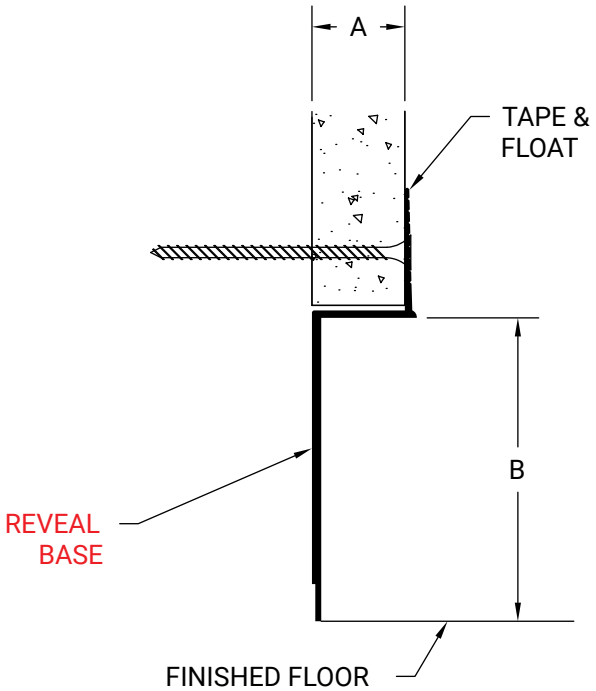

FLUSH REVEAL BASE

Flush Drywall Reveal Base (FDRB) is used at the bottom of a wall to create a durable base with a reveal between the base and drywall surface. Includes alignment splice for connection.

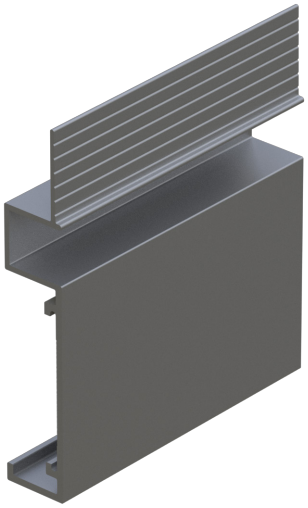

PART #	A DEPTH	B HEIGHT
FDRB 50-200	1/2"	2"
FDRB 50-300	1/2"	3"
FDRB 50-400	1/2"	4"
FDRB 50-600	1/2"	6"
FDRB 625-200	5/8"	2"
FDRB 625-300	5/8"	3"
FDRB 625-400	5/8"	4"
FDRB 625-600	5/8"	6"

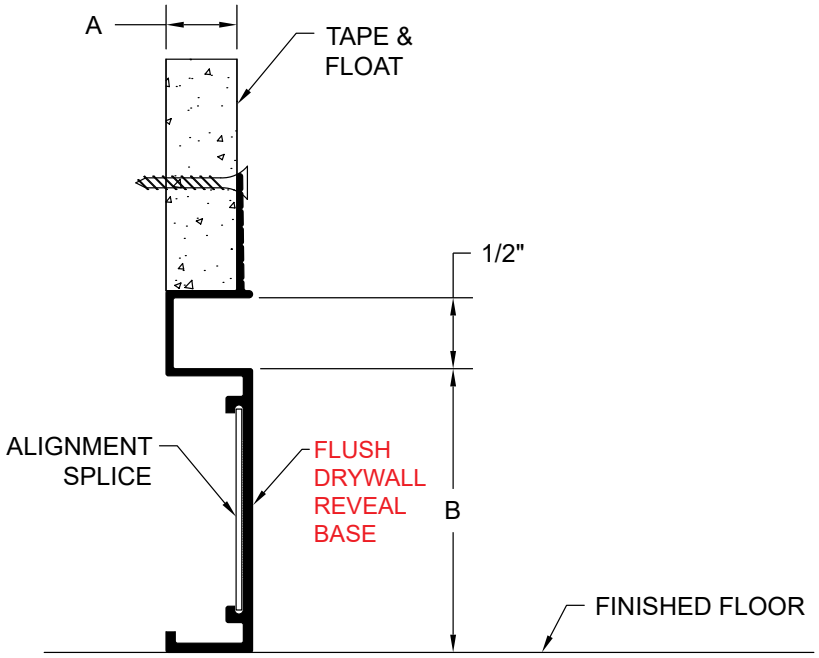

FLUSH BASE

Flush Drywall Base (FDB) is used at the bottom of a wall to create a durable base. Includes alignment splice for connection.

PART #	A DEPTH	B HEIGHT
FDB 50-200	1/2"	2"
FDB 50-300	1/2"	3"
FDB 50-400	1/2"	4"
FDB 50-600	1/2"	6"
FDB 625-200	5/8"	2"
FDB 625-300	5/8"	3"
FDB 625-400	5/8"	4"
FDB 625-600	5/8"	6"

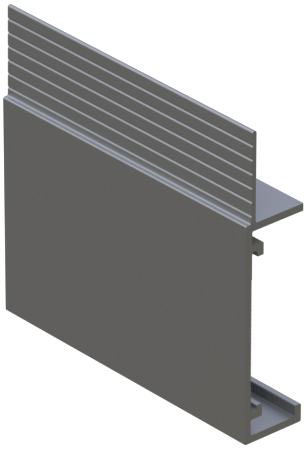

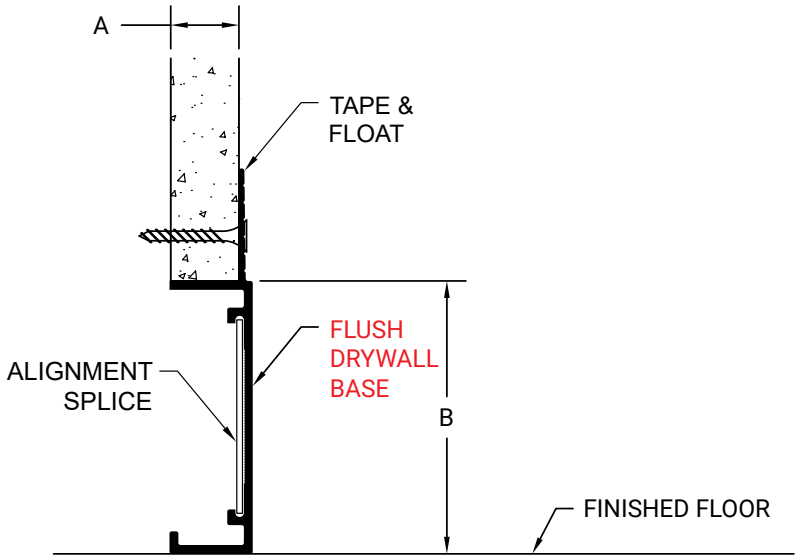

REVEAL HANGING WALL

Drywall Reveal Hanging Wall (DRHW) is used to create a reveal and provide support for metal hanger.

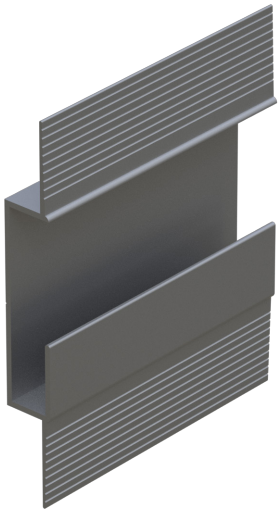

PART #
DRHW
Ref CMH

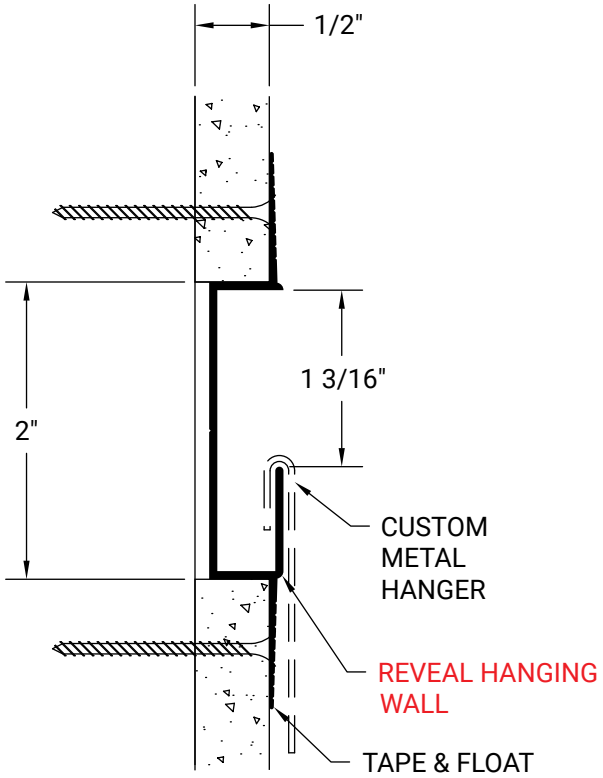

HANGING WALL

Drywall Hanging Wall (DHW) is used in midwall applications with metal hanger.

PART #
DHW
Ref DHI

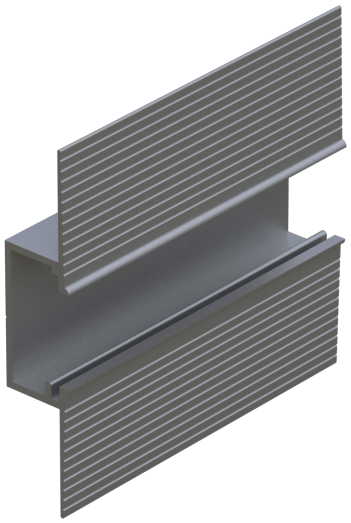

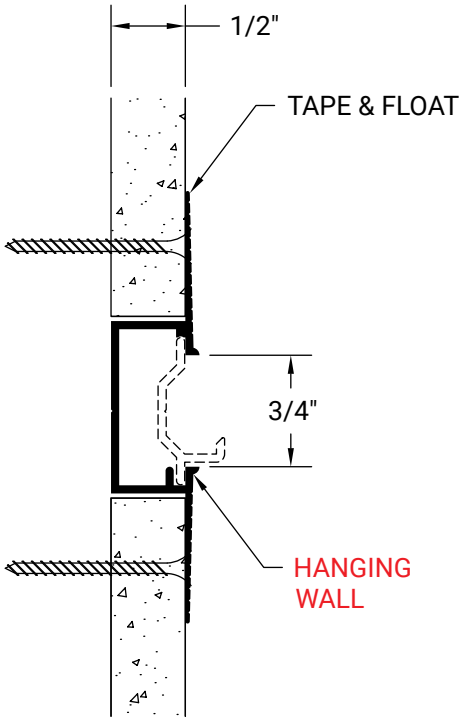

HANGING INSERT

Drywall Hanging Insert (DHI) for use with DHW.

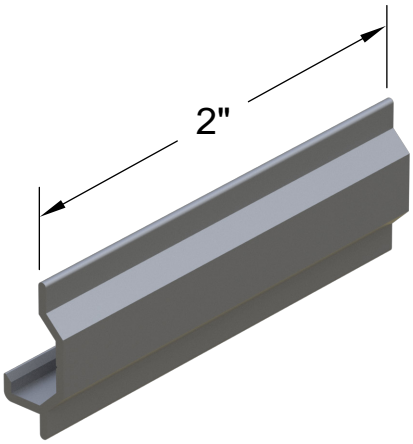

PART #
DHI

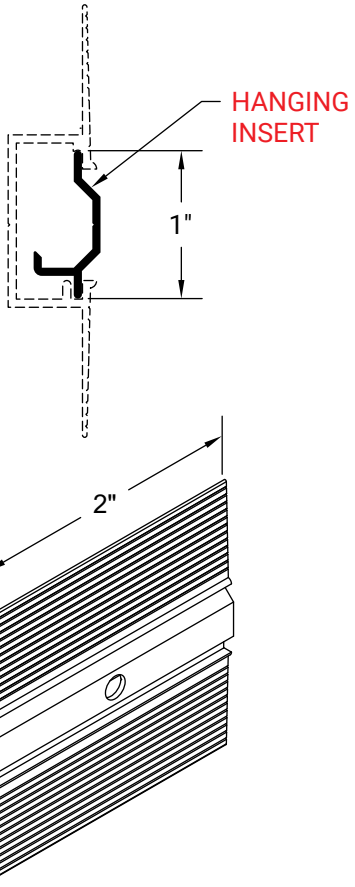

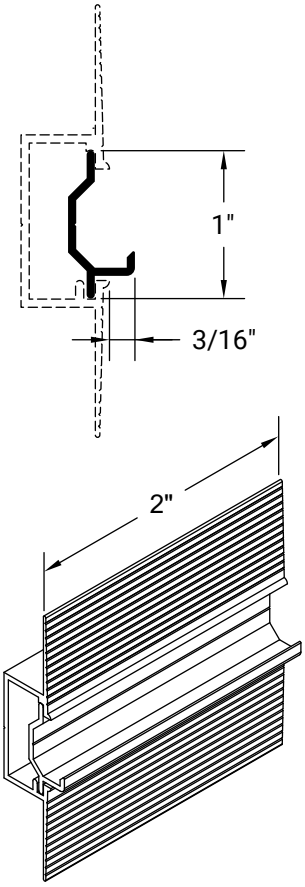

EDGE

Drywall Projection Trim Edge (DPTE) used as a termination in multi-layer drywall applications and to provide a projection edge.

PART #
DPTE 625

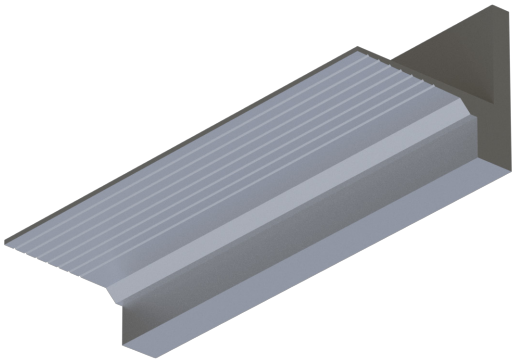

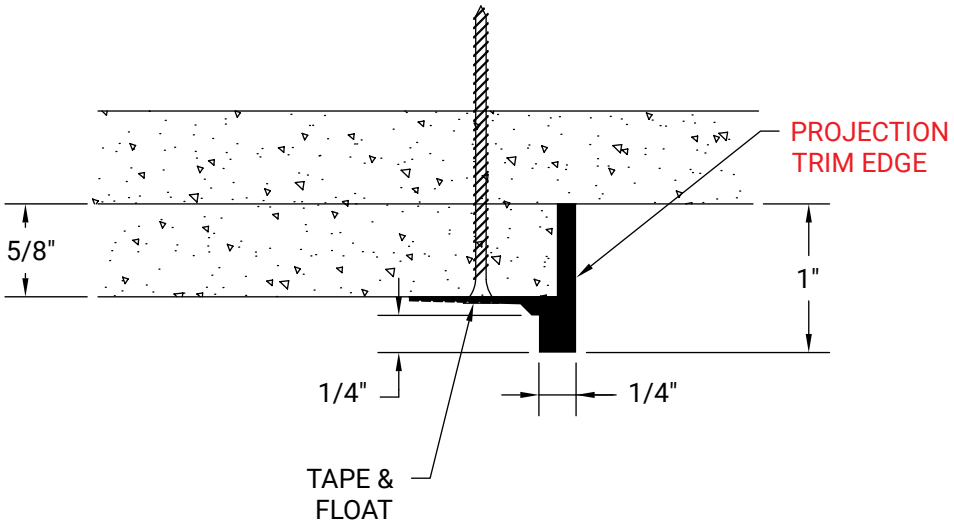

REVEAL

Drywall Projection Trim Reveal (DPTR) is a vertical or horizontal reveal used to create a projection detail.

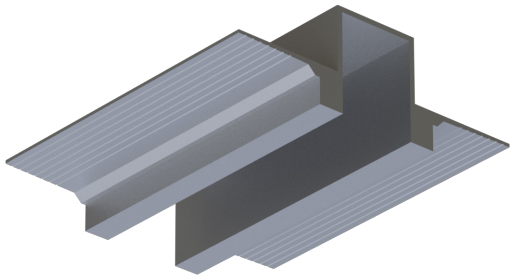

PART #
DPTR 625-75

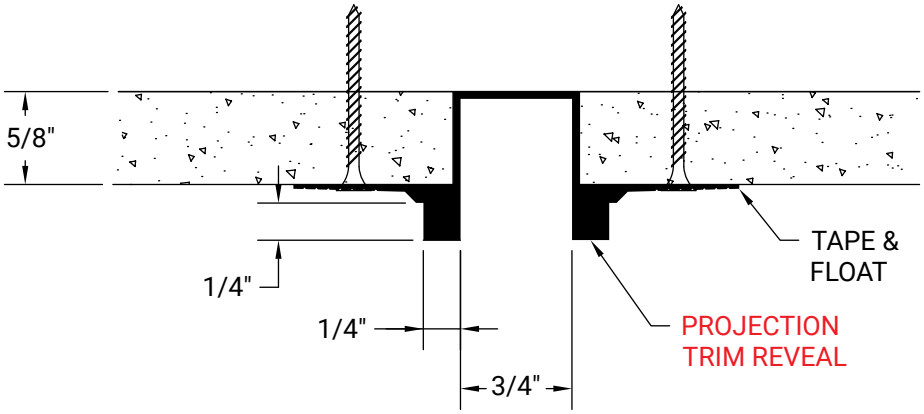

CORNER

Drywall Projection Trim Corner (DPTC) is used to create a projection detail at corners.

PART #
DPTC 625

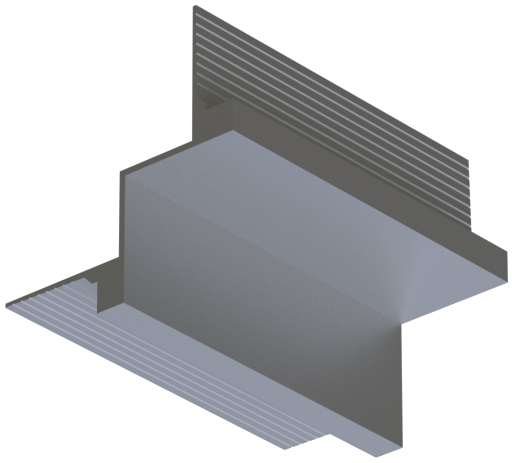

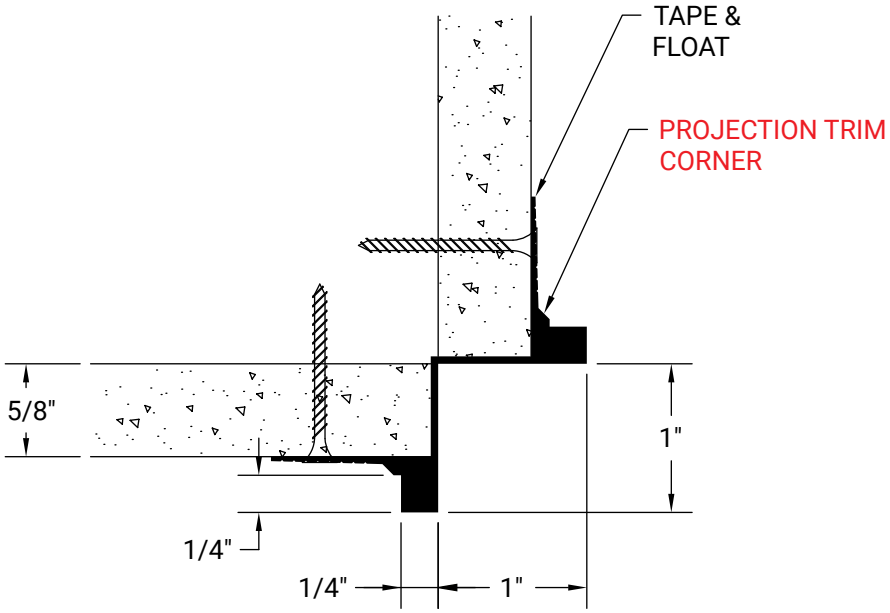

TERMINATION

Drywall Projection Trim Termination (DPTT) is used to create a projection detail at terminations.

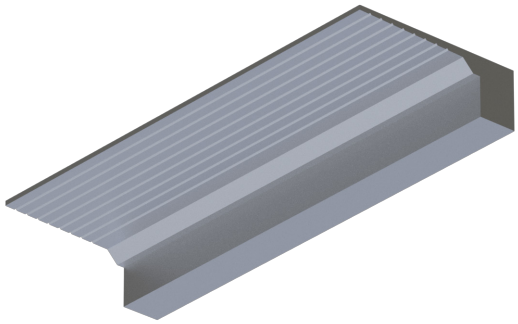

PART #
DPTT

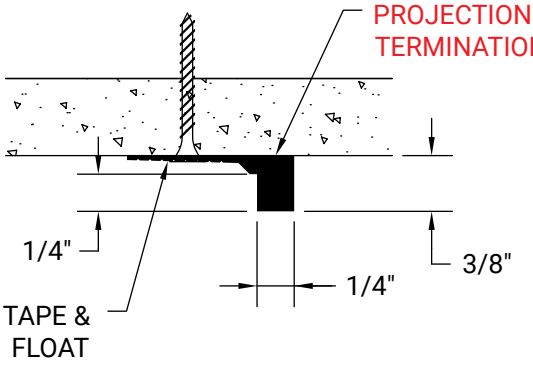

MIDWALL

Drywall Projection Trim Midwall (DPTM) is a vertical or horizontal projection trim used in midwall or ceiling applications.

PART #
DPTM

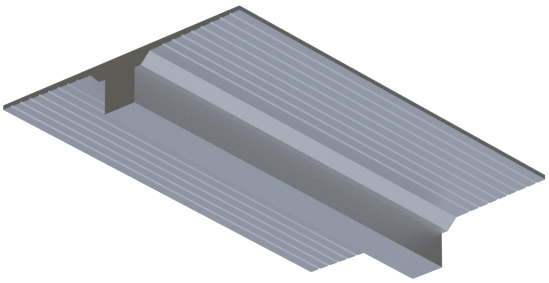

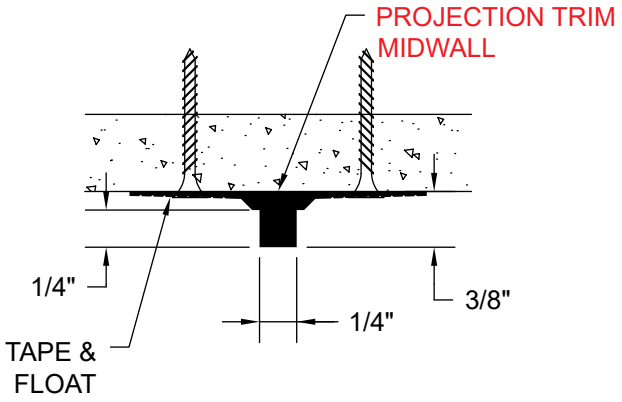

EDGE TRIM

Wallcovering Edge Trim (WCET) is used at base, wall, or ceiling termination for wallcovering.

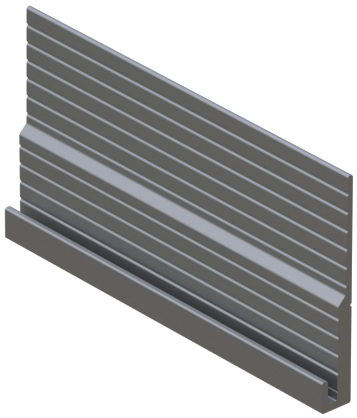

PART #
WCET

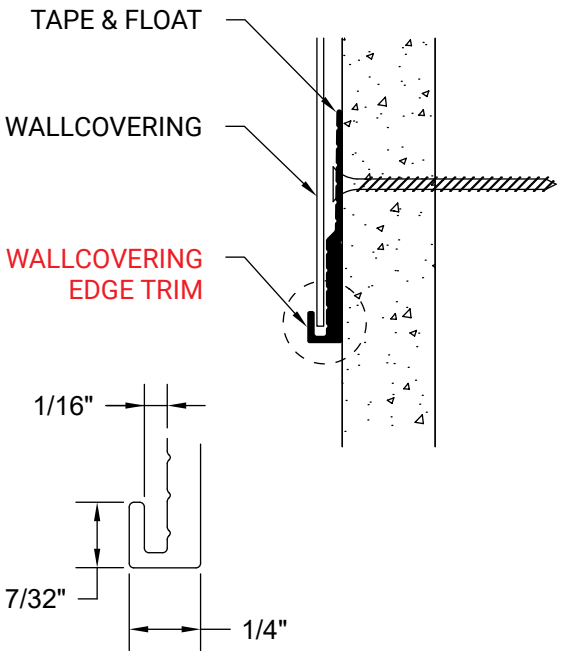

MIDWALL

Wallcovering Midwall (WCM) is used in midwall or ceiling application for wallcovering.

PART #
WCM

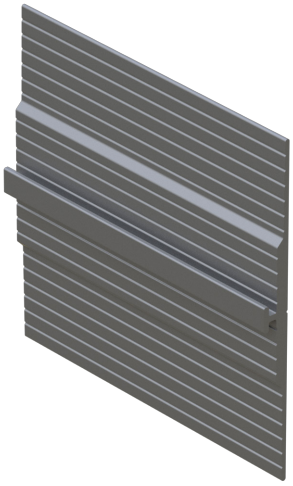

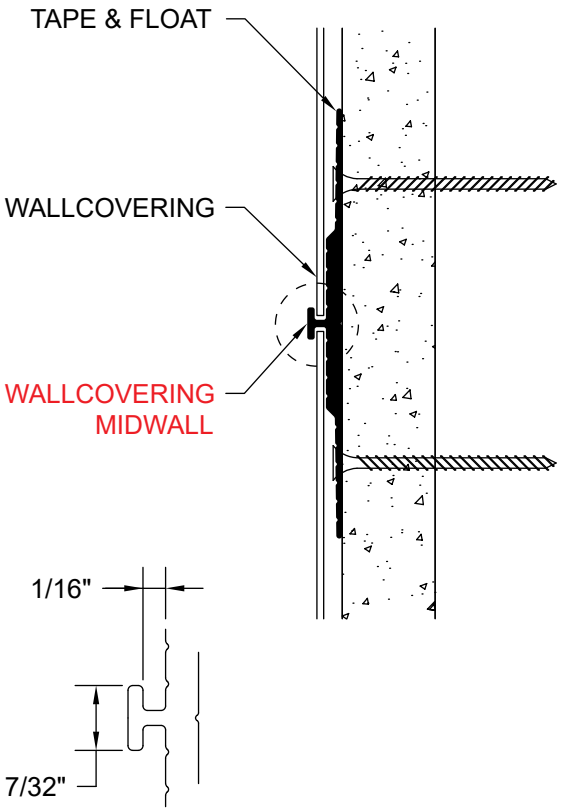

OUTSIDE CORNER

Wallcovering Outside Corner (WCOC) is used at outside corners with wallcovering.

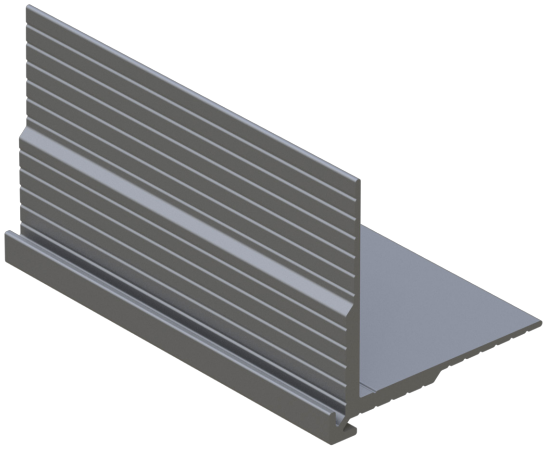

PART #
WCOC

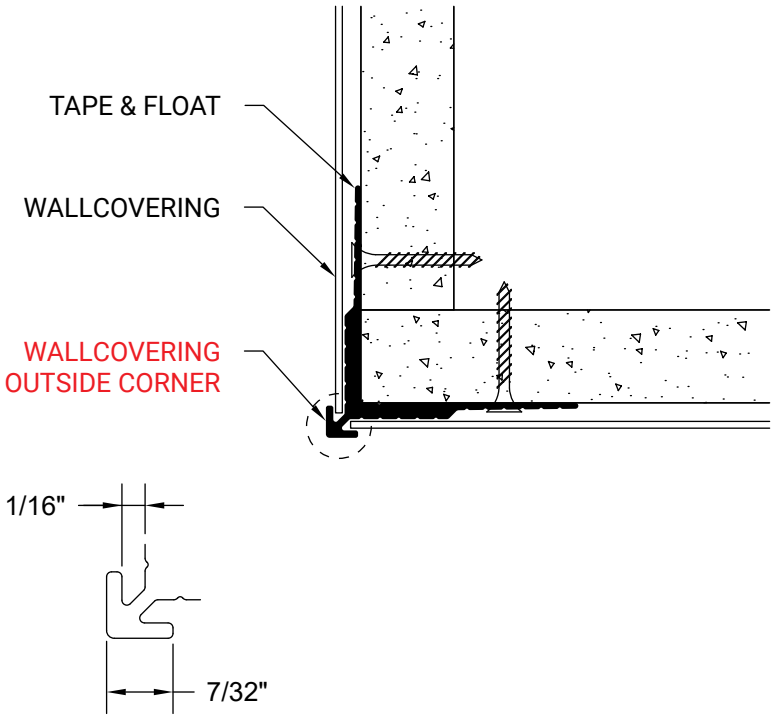

TUCK

Wallcovering Tuck (WCT) is used to tuck fabric and seal it with welt insert at midwall.

PART #
WCT

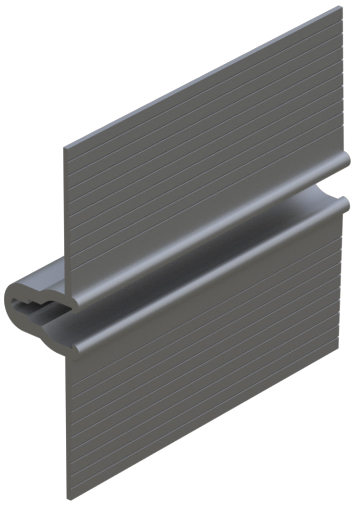

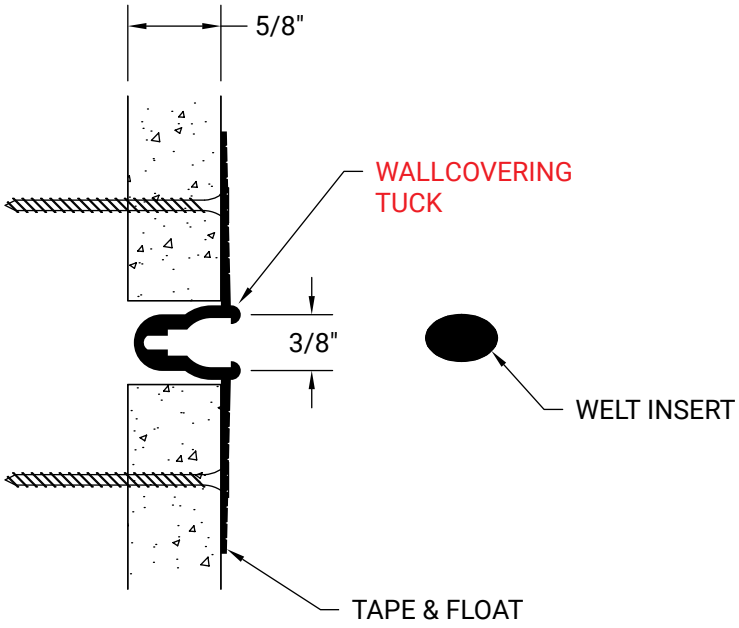

TUCK CORNER

Wallcovering Tuck Corner (WCTC) is used to tuck fabric at outside corner.

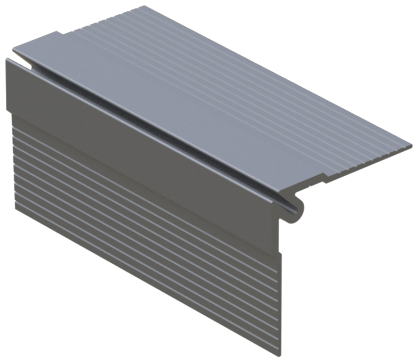

PART #
WCTC

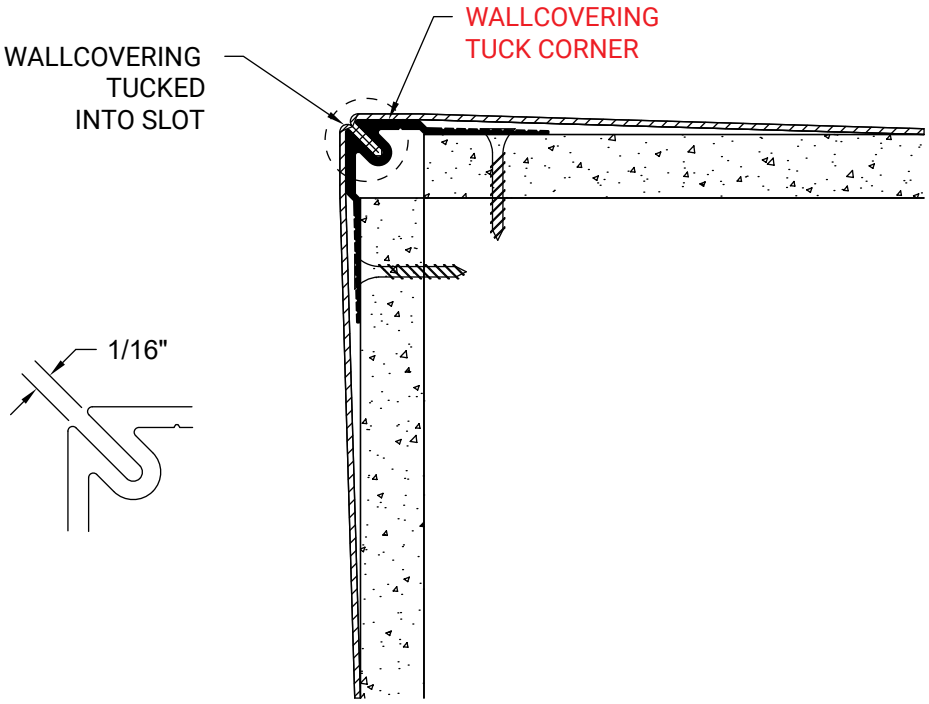

STRAIGHT TRANSITION

Drywall Acoustical Straight Transition (DAST) is used for transition from drywall to suspended ceiling.

PART #
DAST

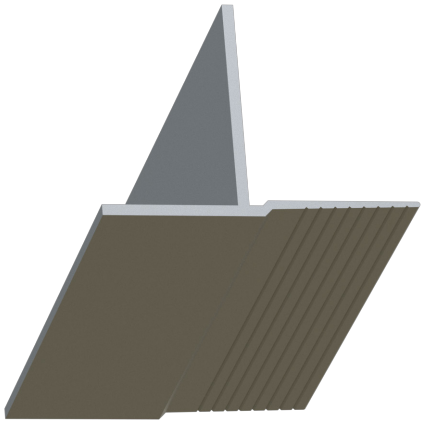

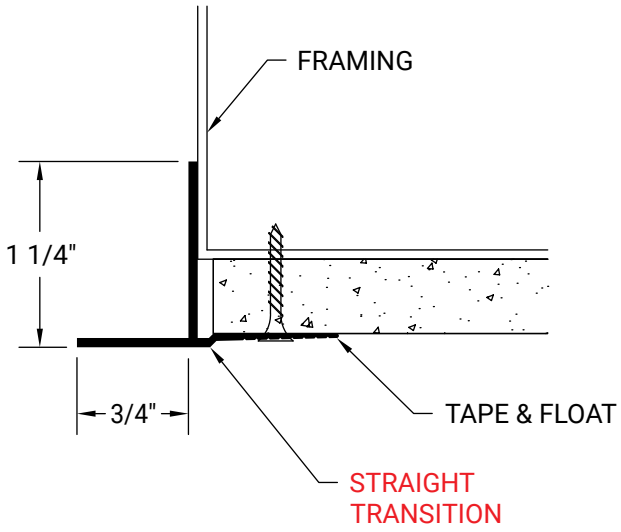

INSIDE CORNER

Drywall Acoustical Inside Corner (DAIC) is used for transition from drywall to suspended ceiling at inside corner.

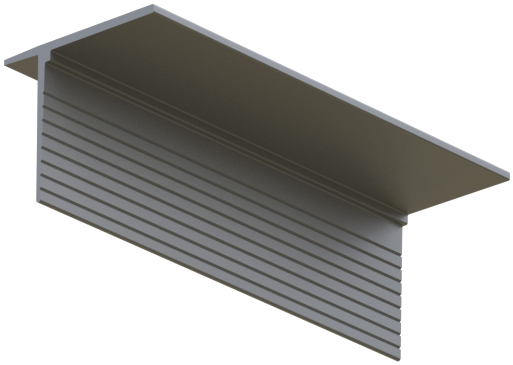

PART #
DAIC

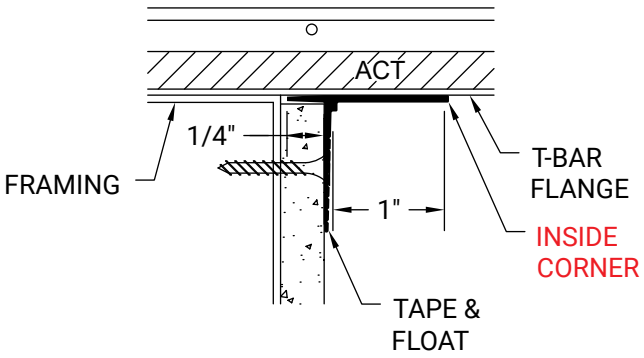

REVEAL CEILING

Drywall Reveal Acoustical Ceiling (DRAC) creates a reveal when used as transition between drywall and acoustical ceiling.

PART #
DRAC 50-50

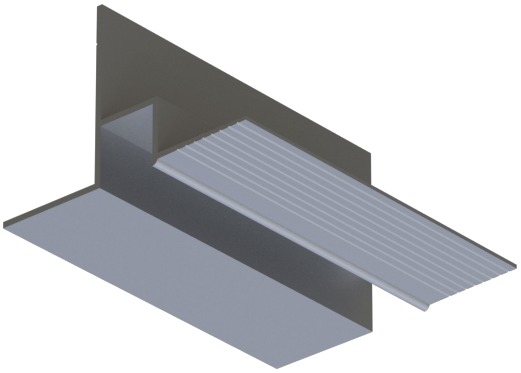

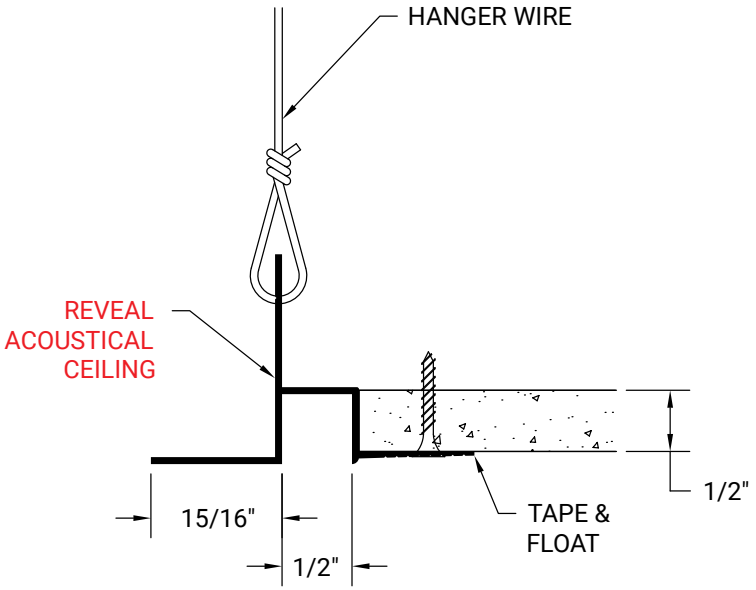

REVEAL WALL ANGLE

Acoustical Reveal Wall Angle (ARWA) creates a reveal at an acoustical ceiling to wall application.

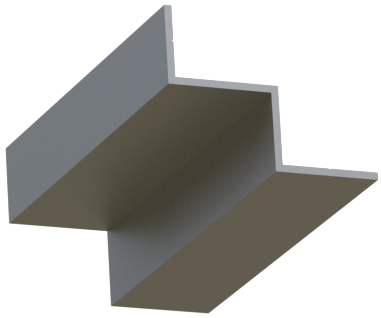

PART #
ARWA 50-50

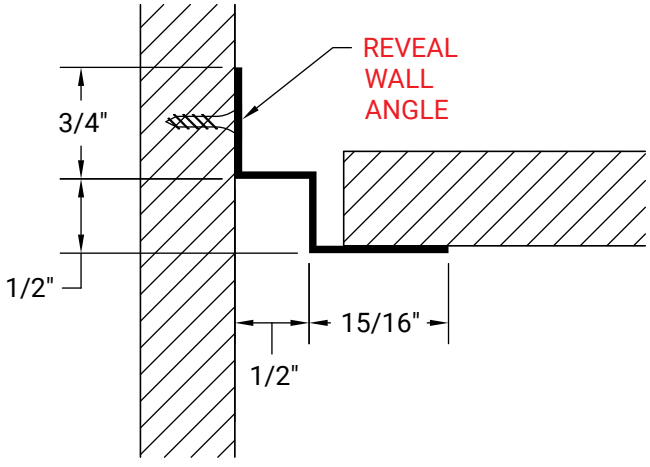

WALL ANGLE

Wall Angle (WA) is a L Trim used to provide a clean transition between the wall and acoustical ceiling.

PART #	A WIDTH	B HEIGHT
WA1	3/4"	3/4"
WA2	15/16"	15/16"

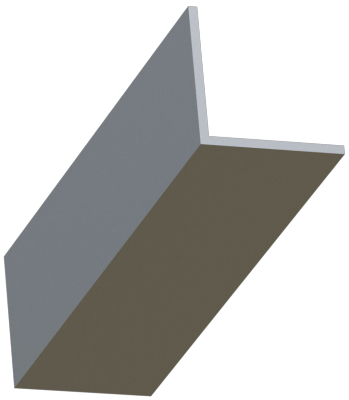

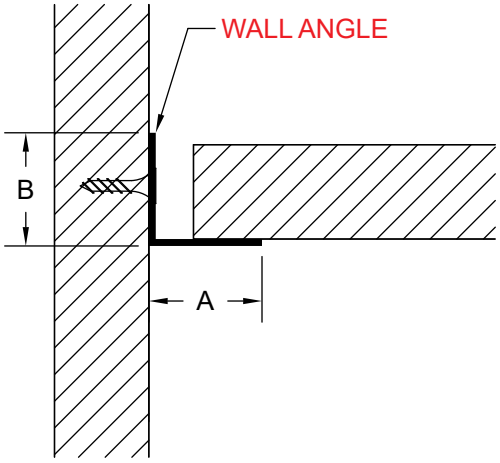

CONTURA™

Contura™ Acoustical (CA) perimeter trim is used when acoustical ceilings are held off the wall to provide a clean edge detail and conceal the ceiling assembly.



PART #	A HEIGHT
CA20 *	2-3/16"
CA30 *	3"
CA40	3-13/16"
CA60	5-13/16"
CA80	7-13/16"

* Only 1 splice boss (unlike profile displayed)

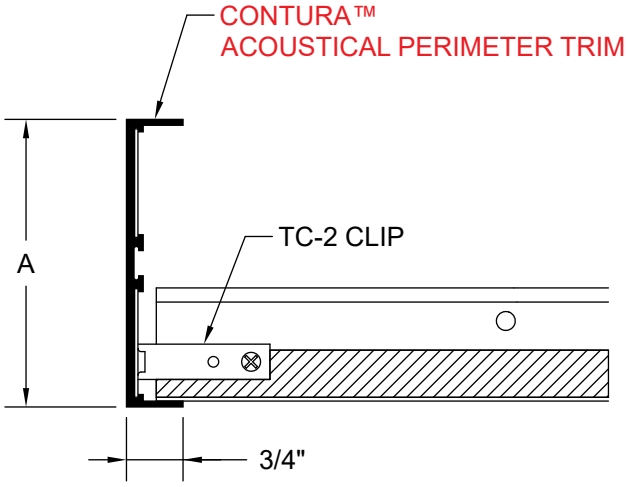

VANTAGE POINT®

Vantage Point® (CAVP) perimeter trim creates a knife edge detail and is available with a closure plate in applications where the profile is visible from above.

PART #	A WIDTH
CA350VP	3-1/2"
CA60VP	6"
CA80VP *	8"

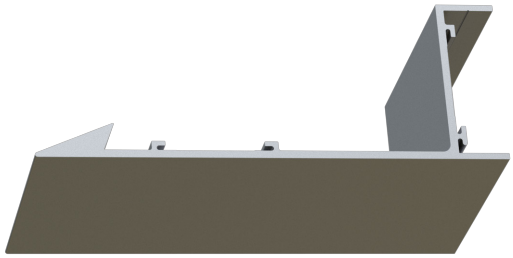

* 2 splice bosses (unlike profile displayed)

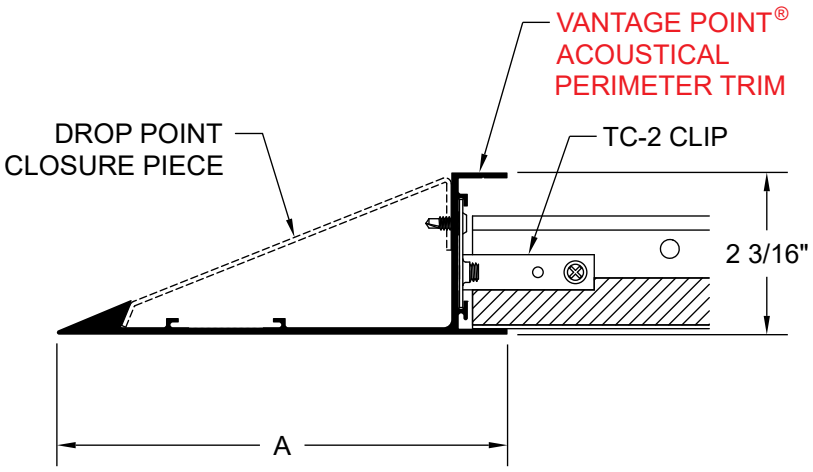

DROP POINT PROFILE ASSEMBLY

Closure Piece and Vantage Point® Perimeter Trim Assembly

PART #	A WIDTH
CA60DP	6"
CA80DP	8"



CONTURA™ TRANSITION

Contura™ Acoustical Transition (CATRN) perimeter trim is used when acoustical ceilings are designed with a height transition to provide a clean edge detail between the two ceiling assemblies.



PART #	A HEIGHT	B HEIGHT
CA20TRN	2"	4-3/16"
CA40TRN	4"	6-3/16"
CA60TRN	6"	8-3/16"

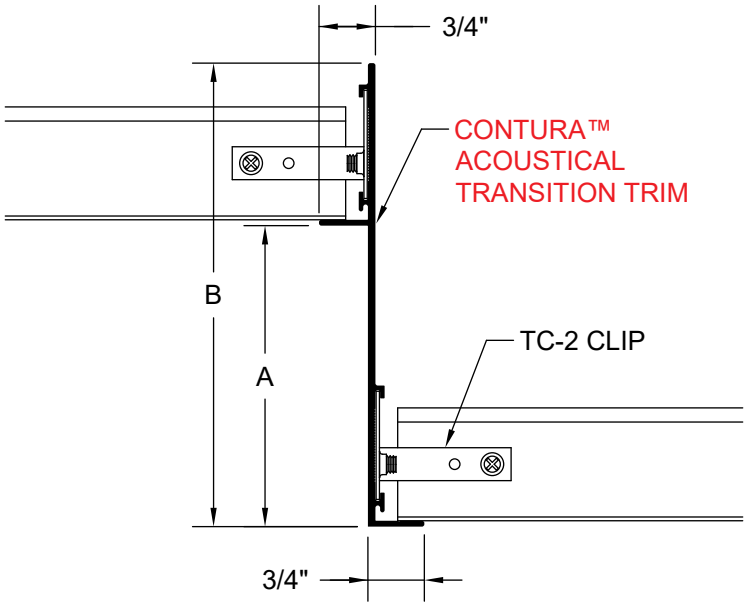

CONTURA™ DRYWALL FLANGE

Designed for use with Contura™ Transition and Vantage Point® to provide a taping flange for drywall ceiling applications.

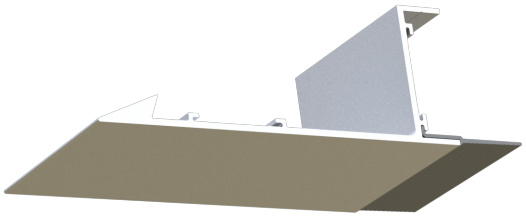



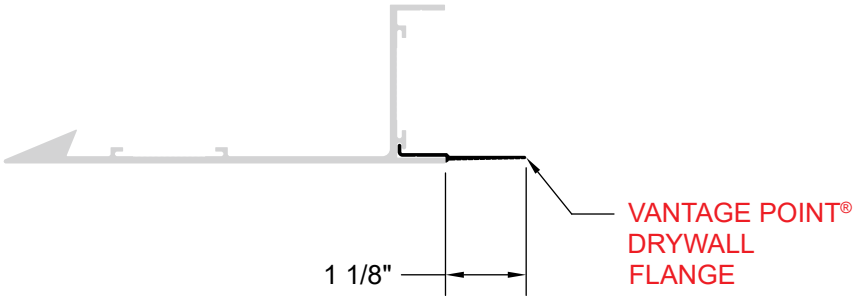

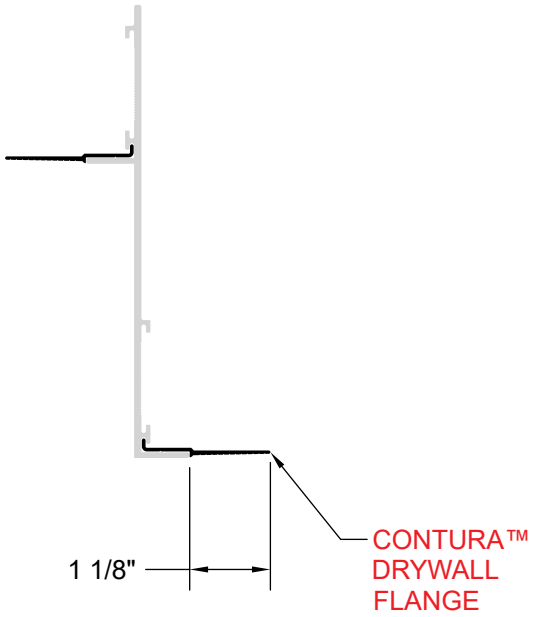

CONTURA™ DRYWALL

Contura™ Drywall (CADW) perimeter trim is used when drywall ceilings are held off the wall to provide a clean edge detail and conceal the ceiling assembly.

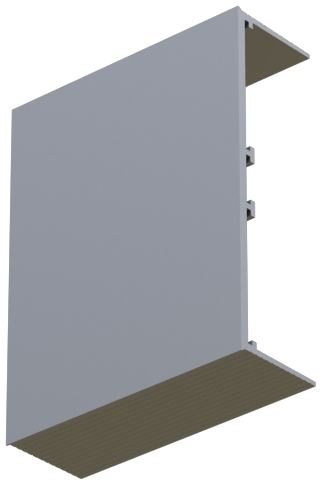

PART #	A HEIGHT
CA20DW *	2-3/16"
CA40DW	3-13/16"
CA60DW	5-13/16"
CA80DW	7-13/16"

* Only 1 splice boss (unlike profile displayed)

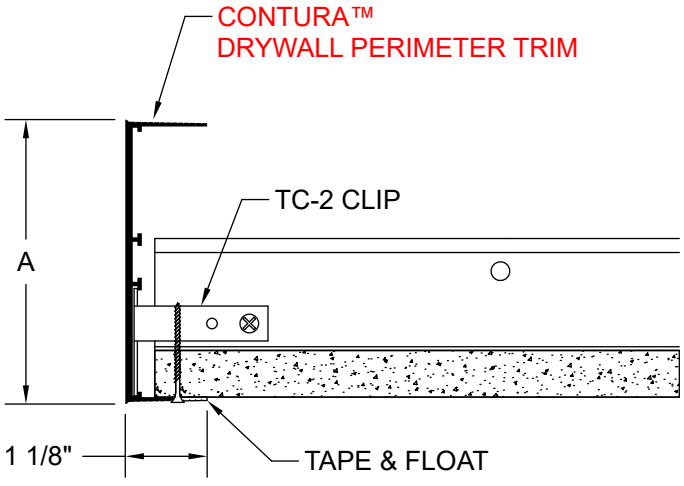

VANTAGE POINT® LIGHT COVE

Vantage Point® Light Cove is a knife edge perimeter trim designed for use with drywall or an acoustical ceiling to conceal lighting.

PART #
VPLC 350-550

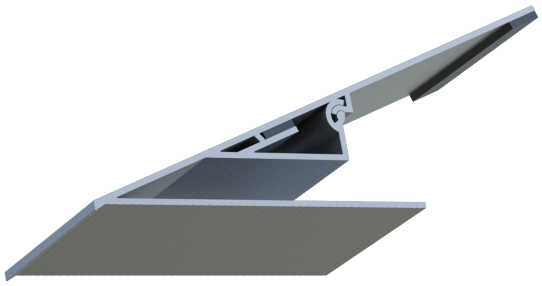

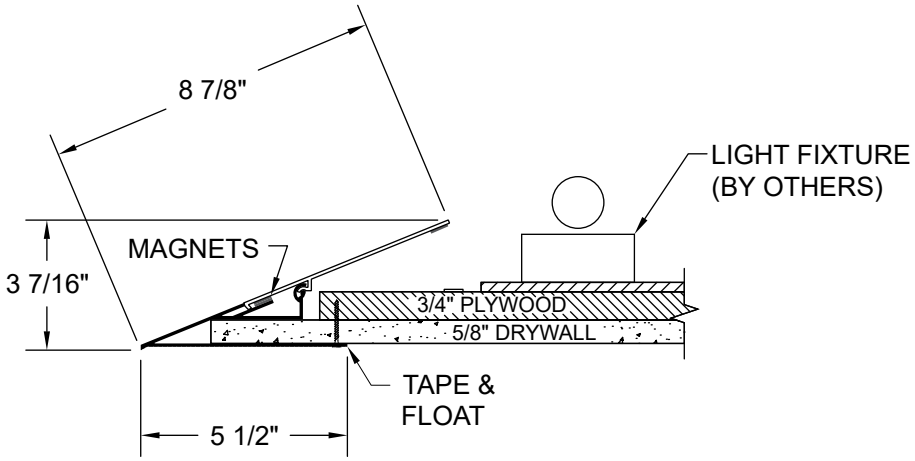

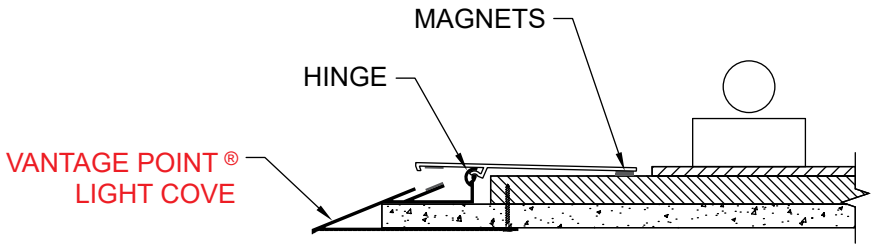

DRYWALL EXPANSION JOINT

Taped-in profile used to create 1" to 2" expansion joint in ceiling applications.

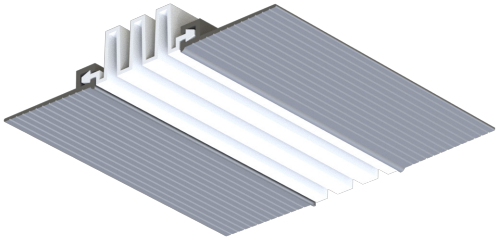

PART #
DX200VERT

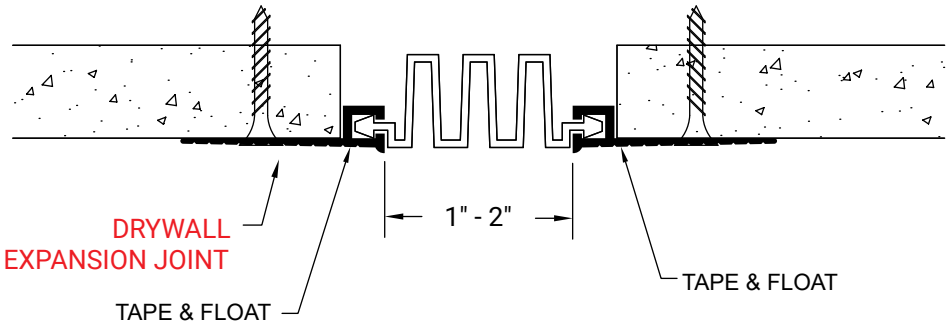

PERIMETER EXPANSION JOINT

Taped-in profile used to create 1" to 2" expansion joint between wall and ceiling perimeter.

PART #
DX200PERI

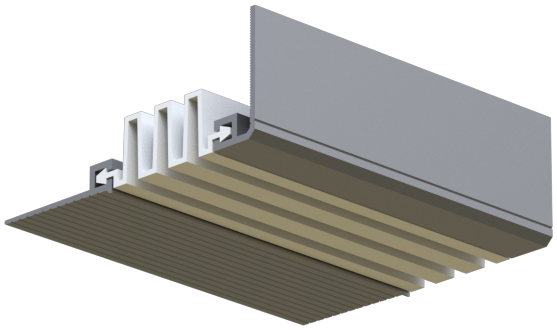

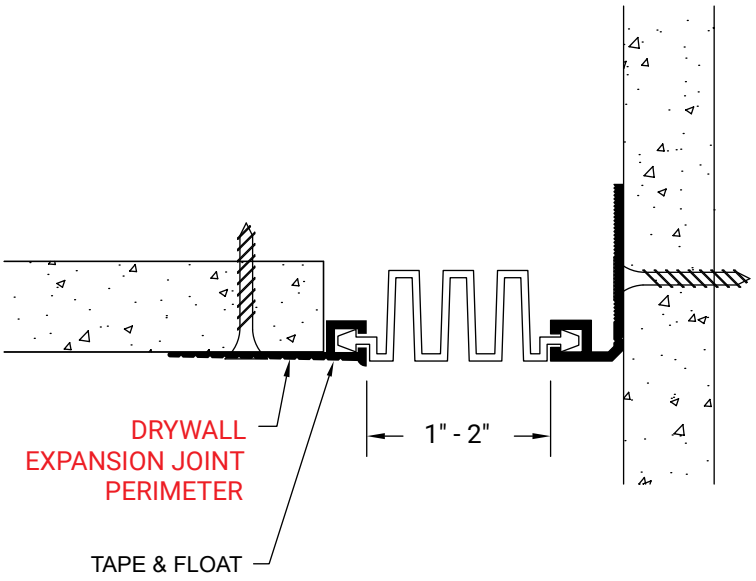

ACOUSTICAL EXPANSION JOINT

Creates 1" to 2" expansion joint between main tee sections.

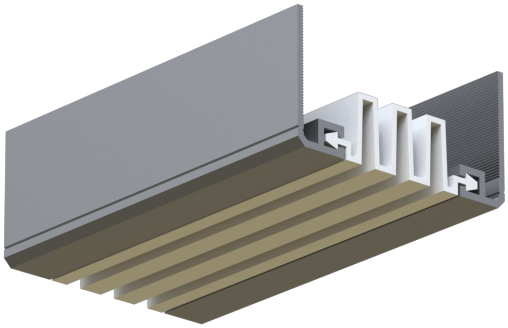

PART #
GX200

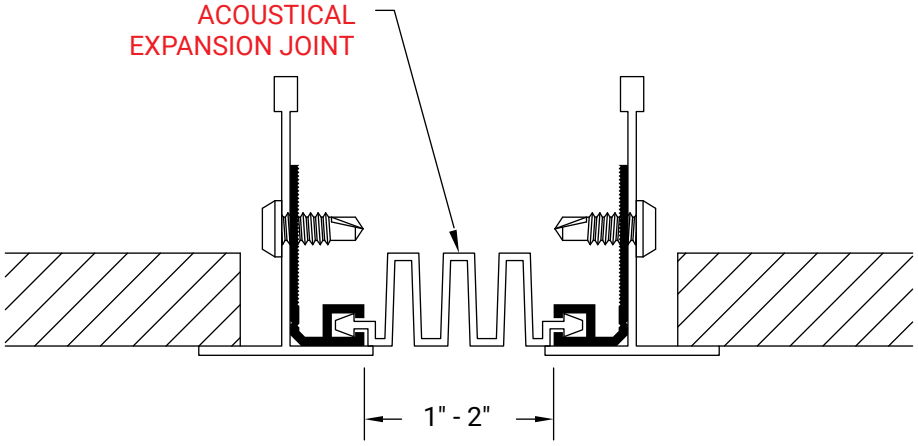

REVEAL

Millwork Capture Reveal (MCR) is used to create a reveal and capture the edge of millwork panels.

PART #	A DEPTH	B WIDTH
MCR 50-50	1/2"	1/2"
MCR 50-100	1/2"	1"
MCR 625-50	5/8"	1/2"
MCR 625-75	5/8"	3/4"
MCR 625-100	5/8"	1"
MCR 625-200	5/8"	2"
MCR 75-75	3/4”	3/4"
MCR 75-100	3/4”	1"
MCR 75-150	3/4"	1-1/2"
MCR 75-200	3/4"	2"
MCR 75-300	3/4"	3"
MCR 75-600	3/4"	6"
MCR 100-100	1"	1"
MCR 100-300	1"	3"

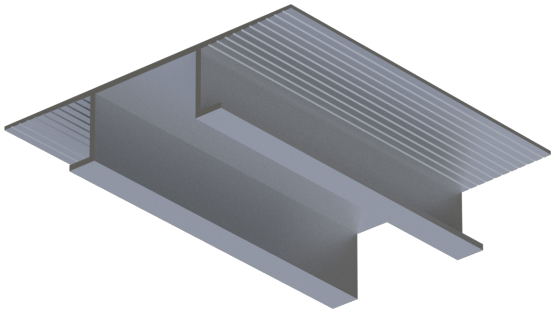

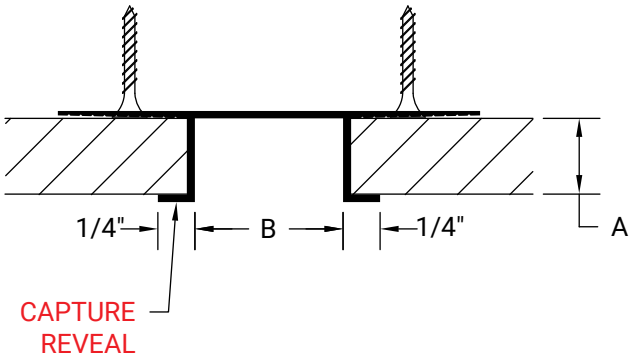

INSIDE CORNER

Millwork Capture Inside Corner (MCIC) is used to create an inside corner and capture the edge of millwork panels.

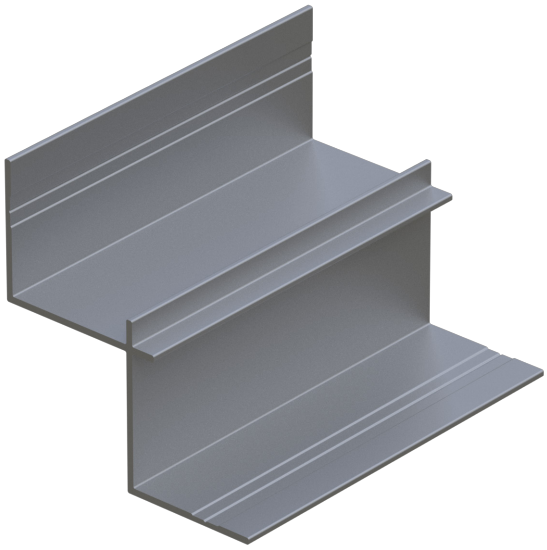

PART #	A DEPTH
MCIC 75	3/4”
MCIC 100	1"

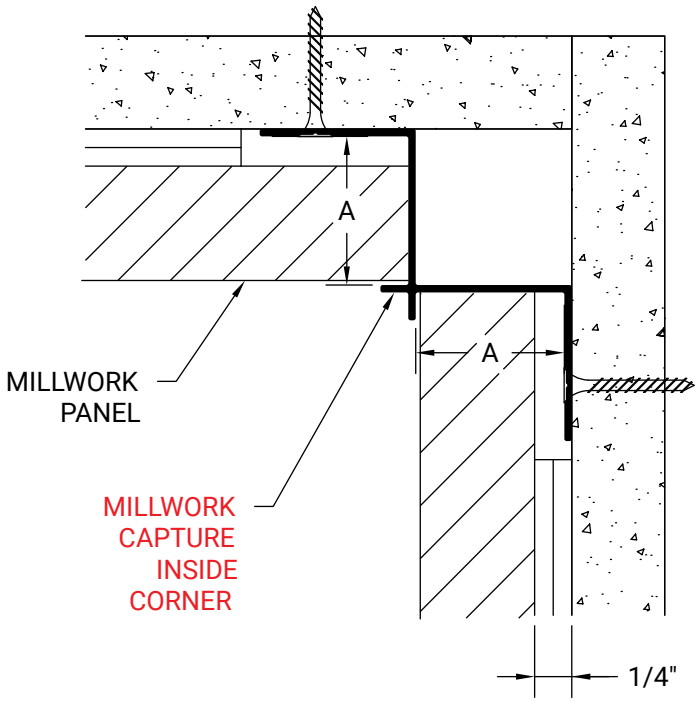

OUTSIDE CORNER

Millwork Capture Outside Corner (MCOC) is used to create an outside corner with reveal and capture the edge of millwork panels.

PART #	A DEPTH
MCOC 75	3/4”
MCOC 100	1"

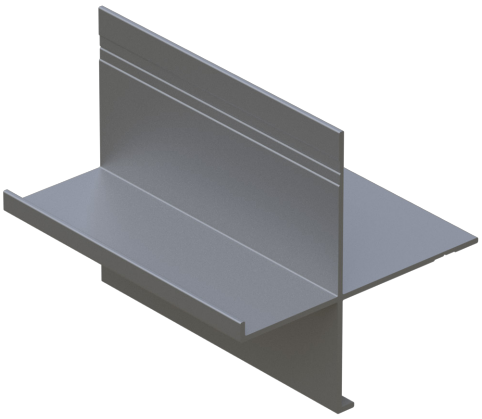

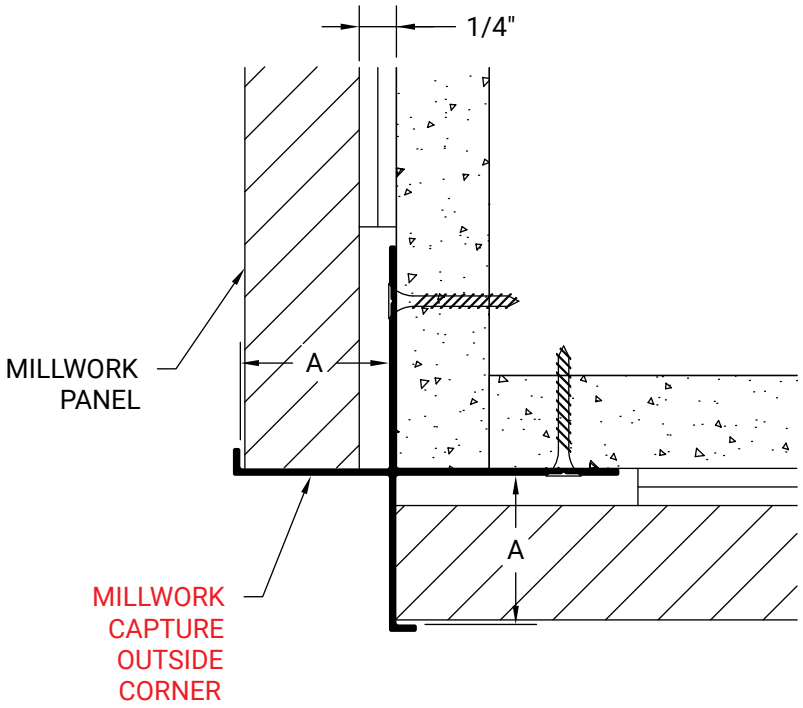

OUTSIDE ARROW CORNER

Millwork Capture Outside Arrow Corner (MCOAC) is used to create a minimal outside corner and capture the edge of millwork panels.

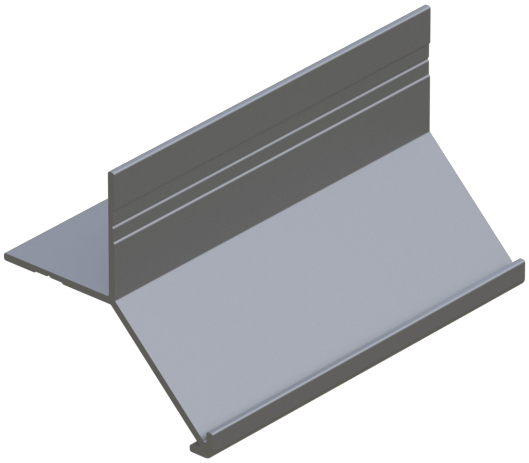

PART #	A DEPTH
MCOAC 75	3/4”
MCOAC 100	1"

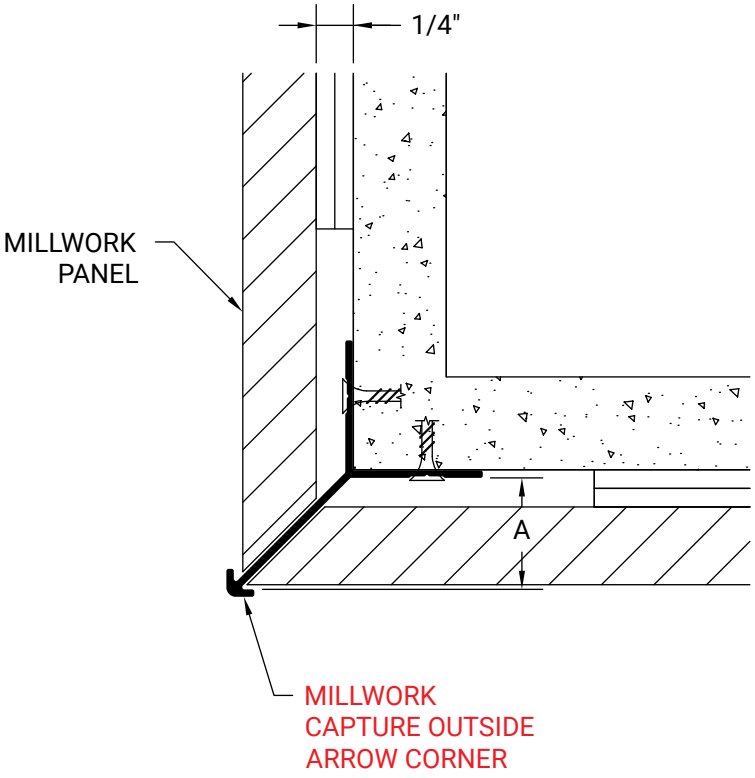

BASE

Millwork Capture Base (MCB) is a two-piece base that captures the edge of millwork panels and allows a variety of base heights.

PART #	A DEPTH	BASE
MC4B 75	3/4”	4”
MC4B 100	1"	4”
MC3B 75	3/4”	3”
MC3B 100	1"	3”

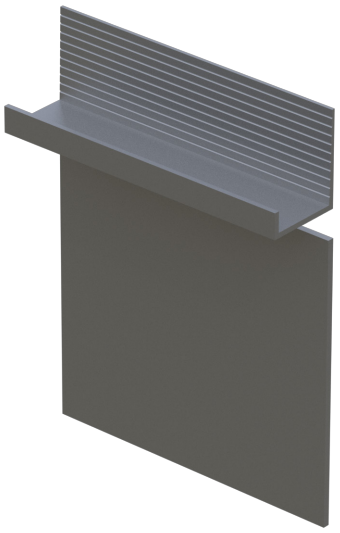

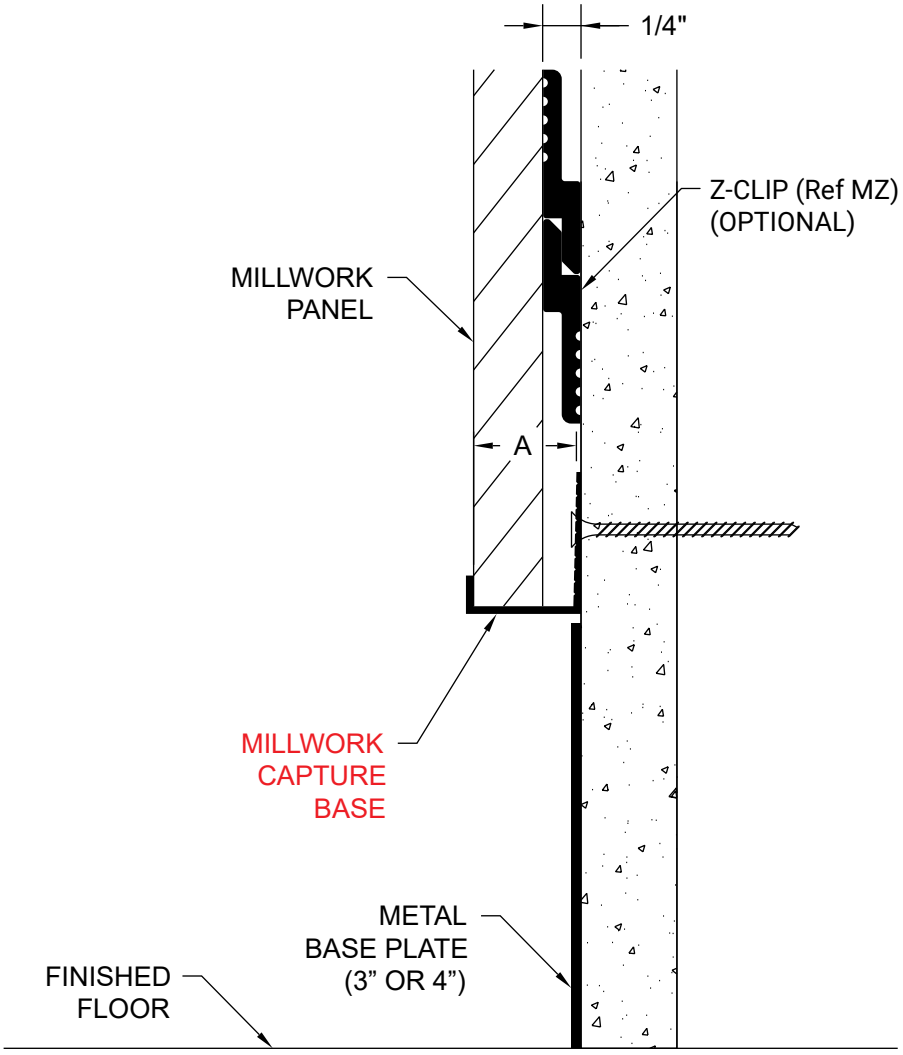

U CHANNEL

Millwork U Channel (MU) is adhered in place to create reveal between millwork panels.

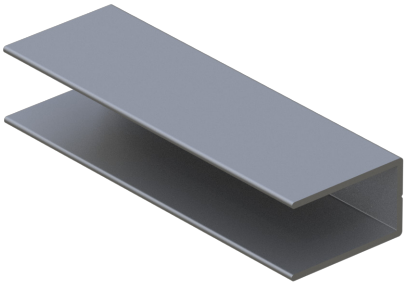

PART #	A DEPTH	B WIDTH
MU 75-50	3/4"	1/2"
MU 100-50	1"	1/2"

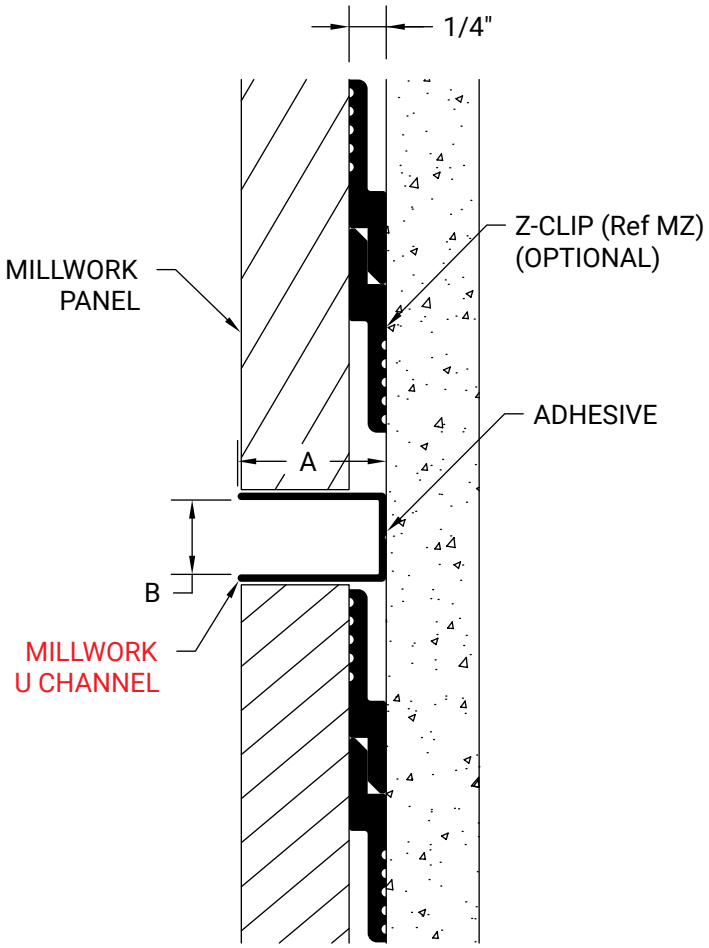

EDGE TRIM

Millwork Capture Edge Trim (MCET) is used to capture the edge of millwork panels.

PART #	A DEPTH
MCET 50	1/2"
MCET 625	5/8"
MCET 75	3/4”
MCET 100	1"

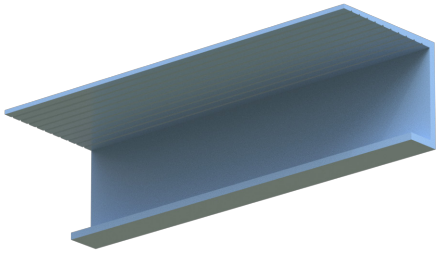

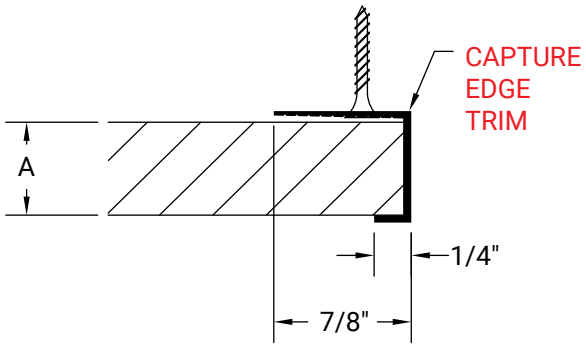

BAR OUTSIDE CORNER

Millwork Bar Outside Corner (MBOC) is used to create a minimal corner between outside panels and provide a bar detail.

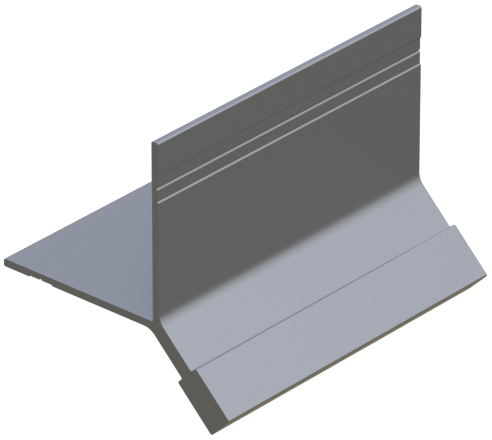

PART #	A DEPTH	B WIDTH
MBOC 75-25	3/4"	1/4"
MBOC 75-125	3/4"	1/8"
MBOC 100-25	1"	1/4"
MBOC 100-125	1"	1/8"

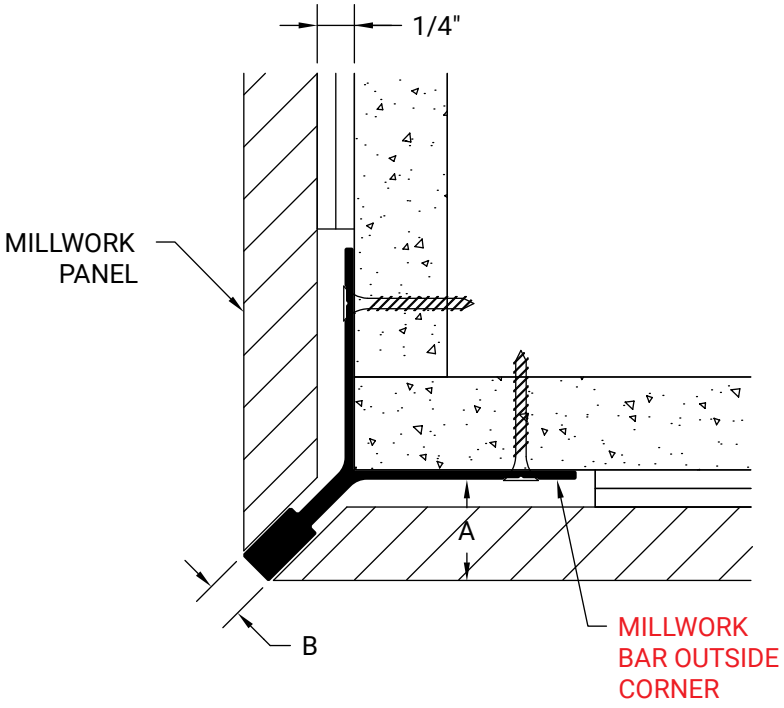

BAR INSIDE CORNER

Millwork Bar Inside Corner (MBIC) is used to create a minimal inside corner and provide a bar detail.

PART #	A DEPTH	B WIDTH
MBIC 75-25	3/4"	1/4"
MBIC 75-125	3/4"	1/8"
MBIC 100-25	1"	1/4"
MBIC 100-125	1"	1/8"

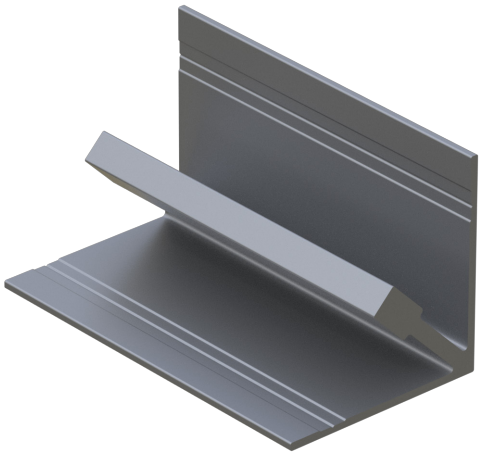

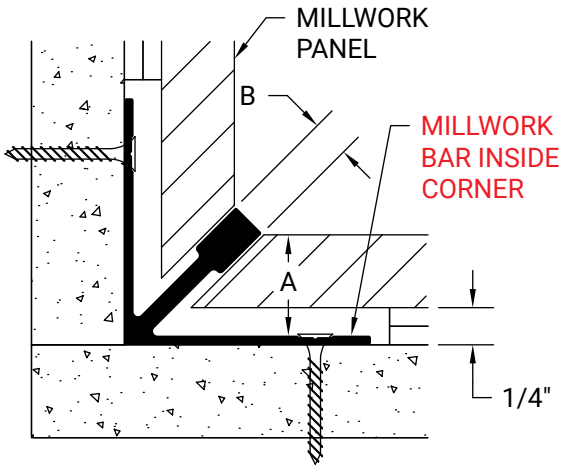

BAR BASE

Millwork Bar Base (MBB) is a two-piece base for millwork panels that creates a bar detail and allows for a variety of base heights / materials.



PART #	A DEPTH	B WIDTH	BASE
MB4B 75-25	3/4"	1/4"	4”
MB4B 75-125	3/4"	1/8"	4”
MB4B 100-25	1"	1/4"	4”
MB4B 100-125	1"	1/8"	4”
MB3B 75-25	3/4"	1/4"	3”
MB3B 75-125	3/4"	1/8"	3”
MB3B 100-25	1"	1/4"	3”
MB3B 100-125	1"	1/8"	3”

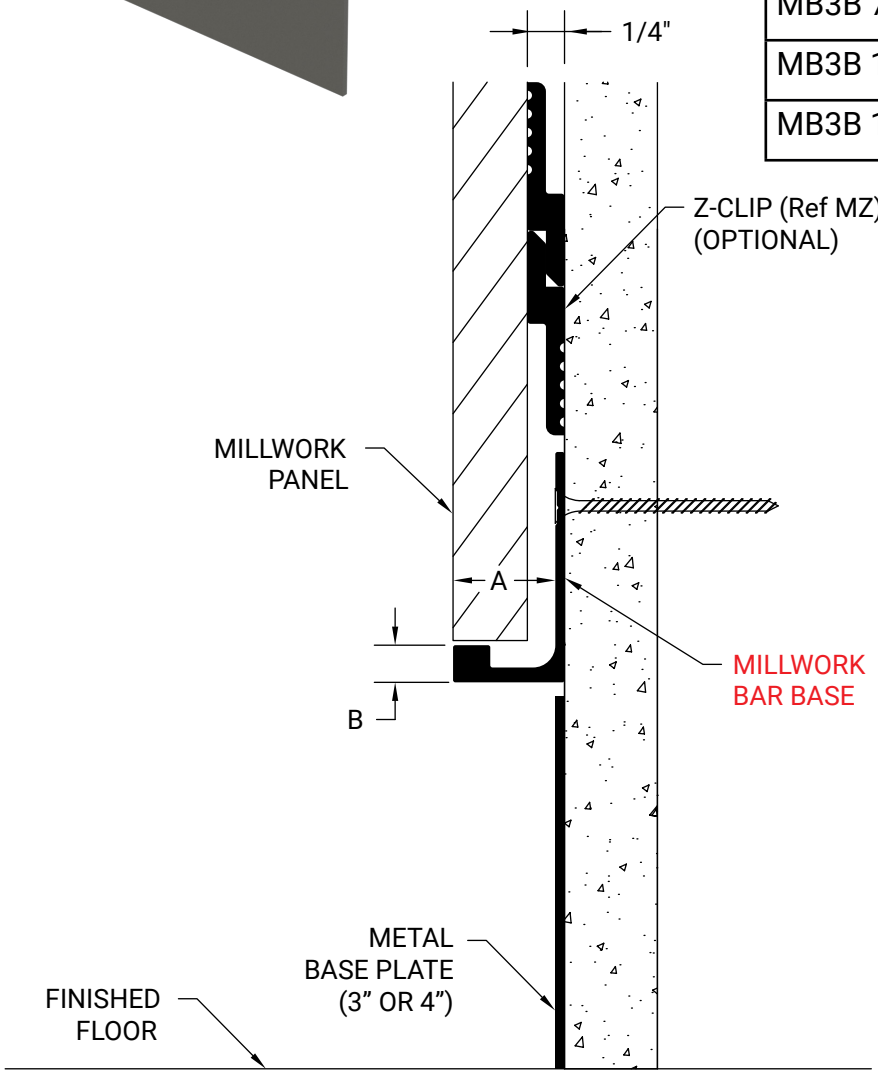

RAIL MOULDING

Millwork Rail Moulding (MRM) is a two-piece snap-on profile commonly used in wall slat applications.

PART #	A DEPTH	B WIDTH
MRM 75	3/4"	3/4"
MRM 100-50	1/2"	1"
MRM 100-100	1"	1"
MRM 200-125	1-1/4"	2"
MRM 400-625	5/8"	4"

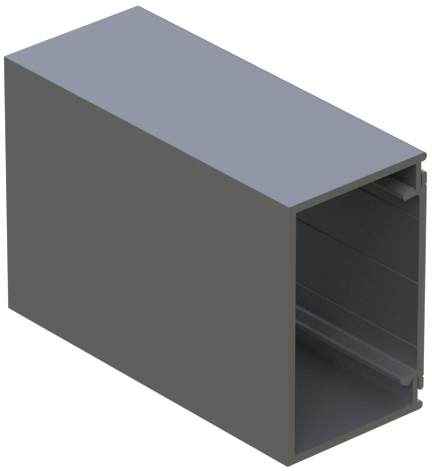

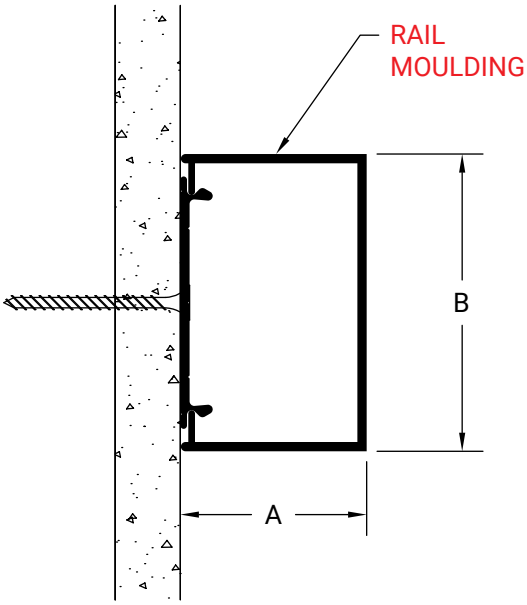

Z-CLIP

Millwork Z-Clip (MZ) is used to hang wall panels.

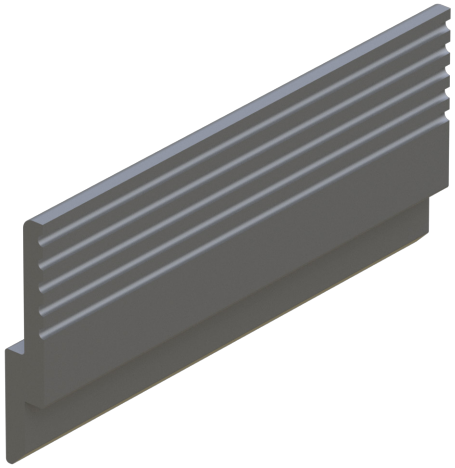

PART #	A DEPTH	B LIFT-OFF
* MZ 25-375	1/4”	3/8”

* Used to flush 1/2” or 3/4” panels with top of millwork profiles

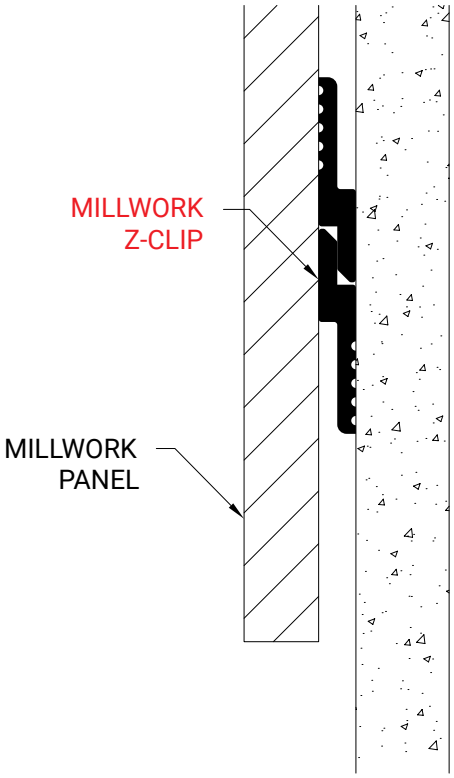

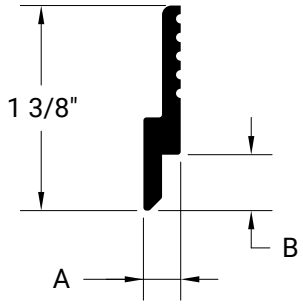

BAR TRIM

Millwork Bar Trim (MBT) is used between millwork panels or as a termination piece to create a traditional bar detail.

PART #	A DEPTH	B WIDTH
MBT 75-25	3/4"	1/4"
MBT 75-125	3/4"	1/8"
MBT 100-25	1"	1/4"
MBT 100-125	1"	1/8"

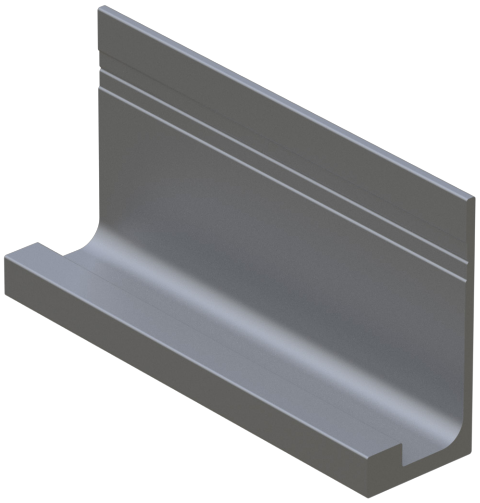

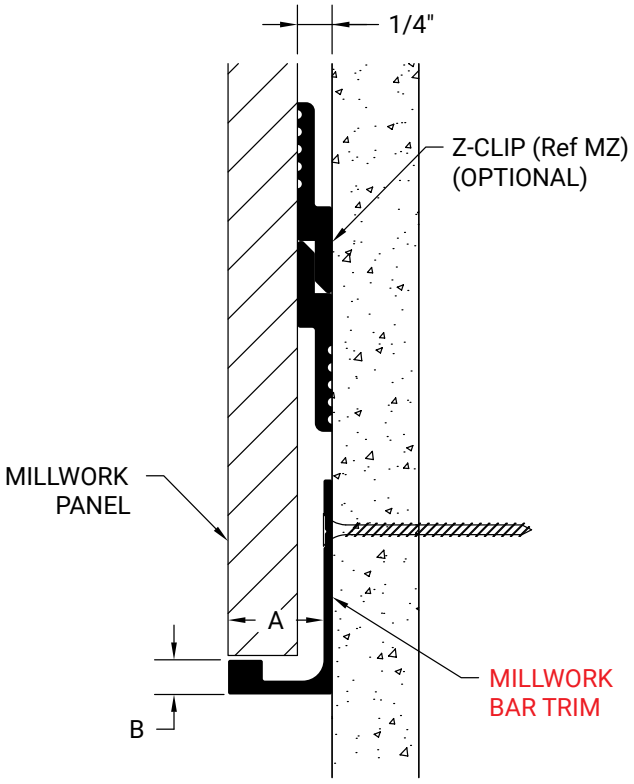

REVEAL F

Stucco Reveal F (SRF) is a vertical or horizontal reveal used to trim around doors, windows, or against dissimilar materials.

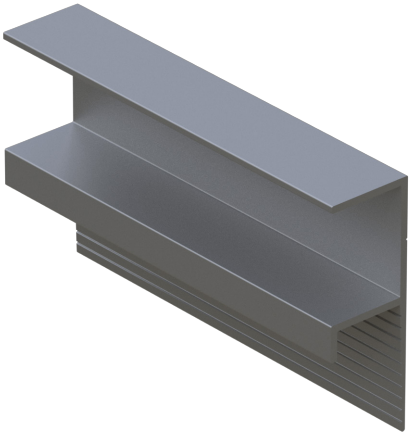

PART #	A DEPTH	B WIDTH
SRF 75-50	3/4"	1/2”
SRF 75-75	3/4”	3/4”
SRF 75-100	3/4”	1"

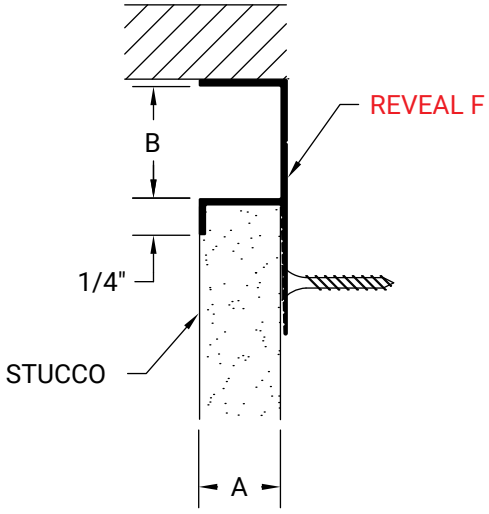

MIN REVEAL

Stucco Min Reveal (SMR) can be used horizontally or vertically to create a minimum reveal between sections of stucco.

PART #
SMR 25-25-75

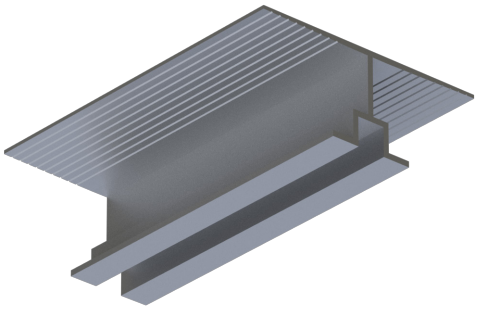

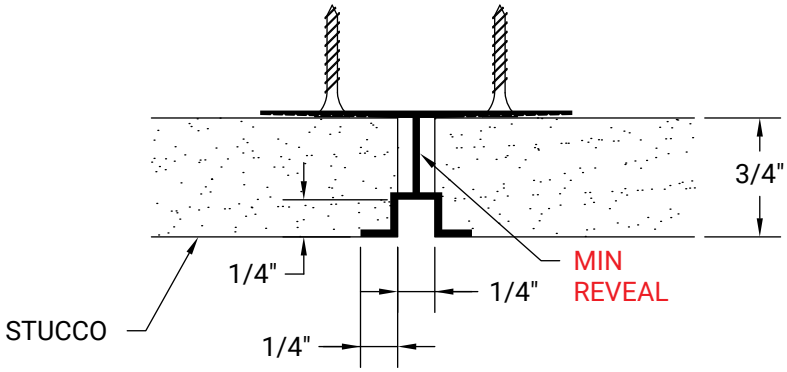

REVEAL

Stucco Reveal (SR) can be used horizontally or vertically to provide relief of breaks in long runs of stucco.

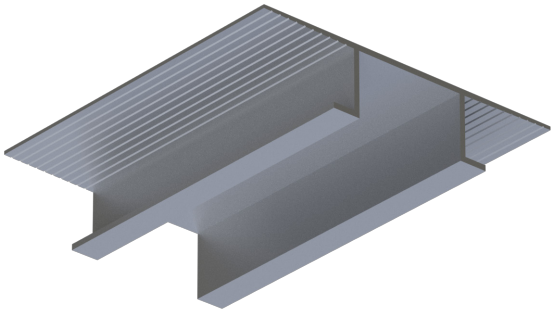

PART #	A DEPTH	B WIDTH
SR 75-50	3/4"	1/2'
SR 75-75	3/4"	3/4"
SR 75-100	3/4"	1"
SR 75-150	3/4"	1-1/2"
SR 75-200	3/4"	2"
SR 75-300	3/4"	3"
SR 75-600	3/4"	6"

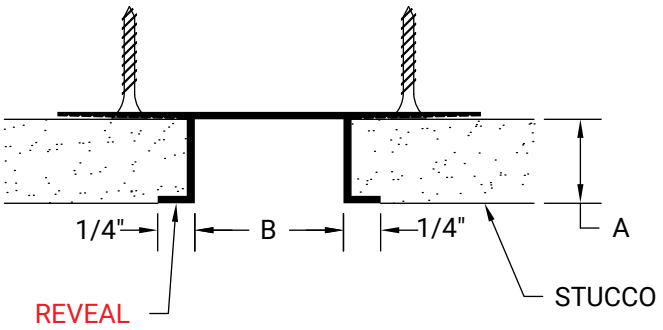

SOFFIT REVEAL

Stucco Soffit Reveal (SSR) is used to create a reveal between walls and ceilings.

PART #	A DEPTH	B WIDTH
SSR 75-75	3/4"	3/4"
SSR 75-200	3/4"	2"
SSR 75-300	3/4"	3"
SSR 75-400	3/4"	4"

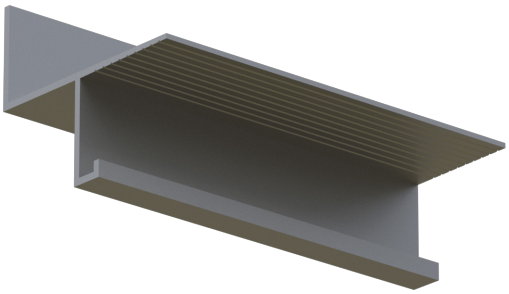

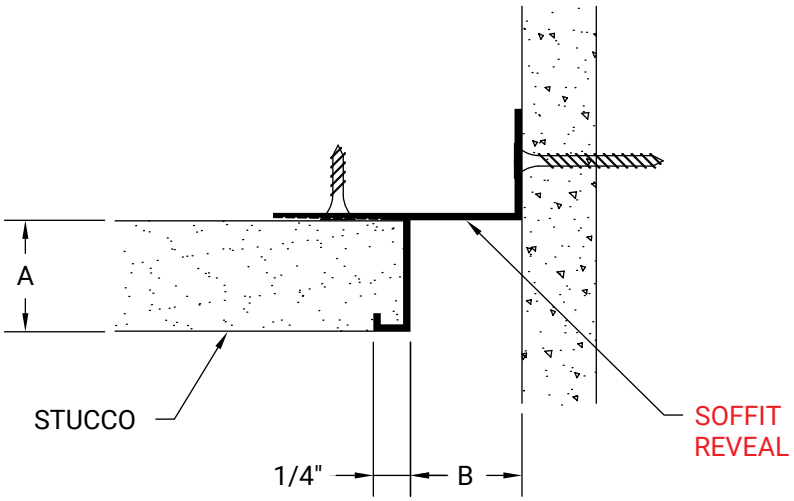

EDGE TRIM

Stucco Edge Trim (SET) is used as a termination piece for stucco.

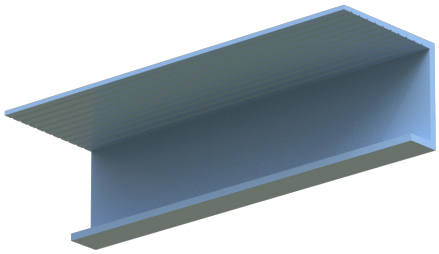

PART #
SET 75

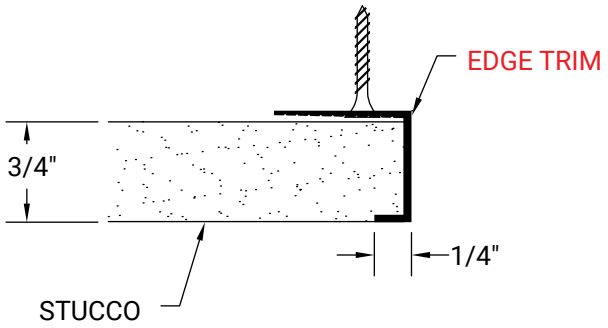

ARROW OUTSIDE CORNER

Stucco Arrow Outside Corner (SAOC) protects stucco corner with a minimal exposed metal surface.

PART #
SAOC 75

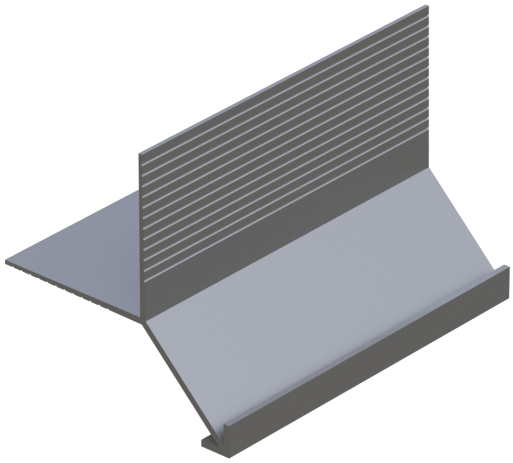

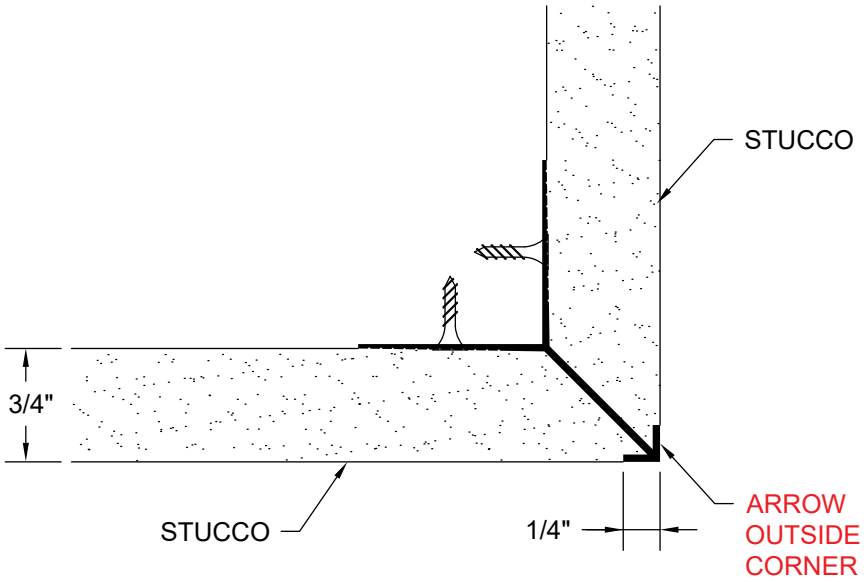

SOFFIT CORNER

Stucco Soffit Corner (SSC) is used to transition soffit to fascia.

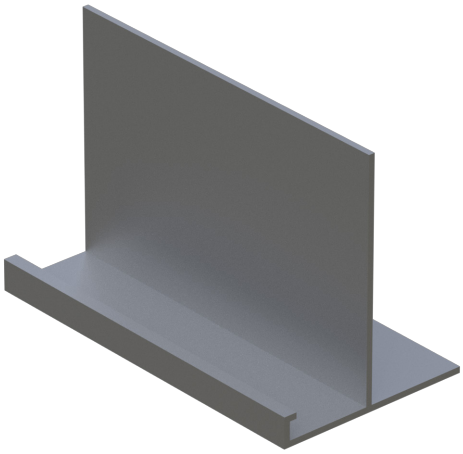

PART #
SSC 75

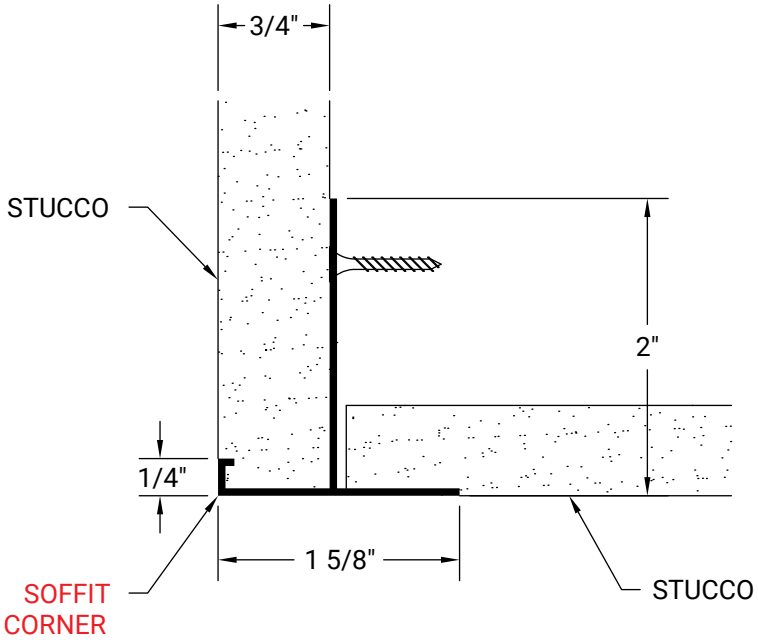

SOFFIT REVEAL CORNER

Stucco Soffit Reveal Corner (SSRC) is used to create a reveal between soffit and fascia.

PART #
SSRC 75

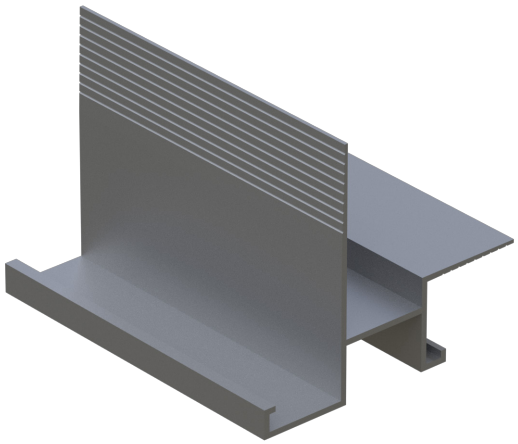

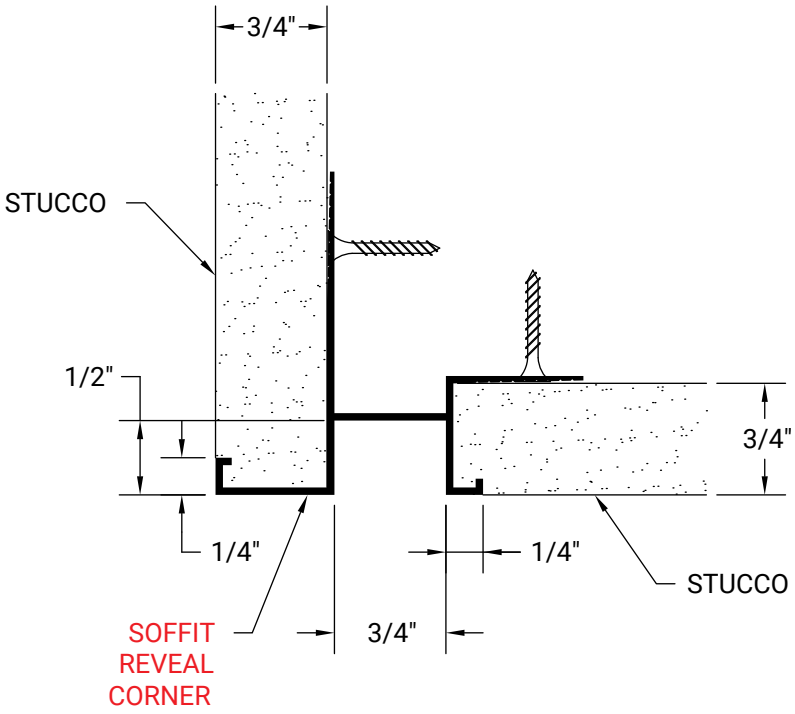

OUTSIDE CORNER

Stucco Outside Corner (SOC) is used at the edges of corners of soffits to provide a protective edge and create a reveal.

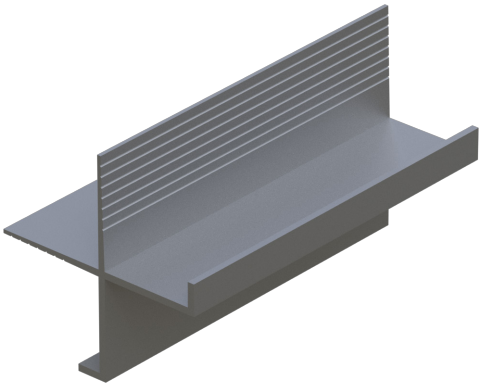

PART #
SOC 75

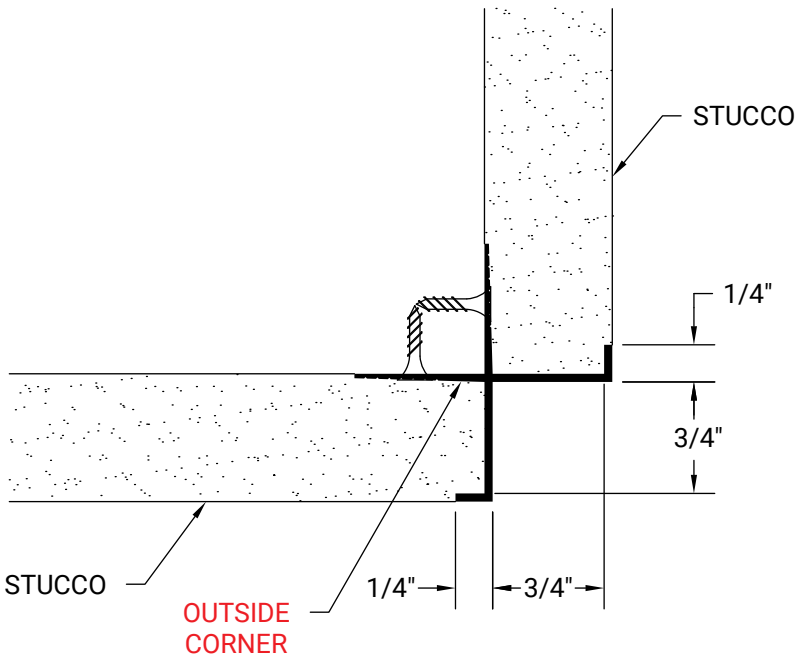

SOFFIT VENT

Stucco Soffit Vent (SSV) is used to create vented reveal between sections of stucco.

PART #	A DEPTH	B WIDTH	OPEN AREA %/LF
SSV 75-50	3/4"	1/2'	22
SSV 75-75	3/4"	3/4"	14
SSV 75-100	3/4"	1"	21
SSV 75-150	3/4"	1-1/2"	21
SSV 75-200	3/4"	2"	21
SSV 75-300	3/4"	3"	21
SSV 75-600	3/4"	6"	17

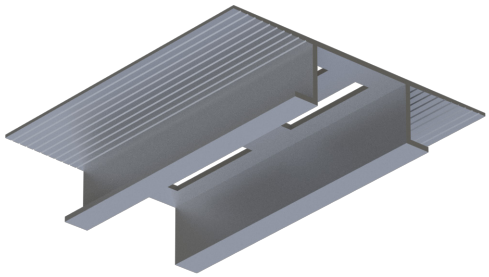

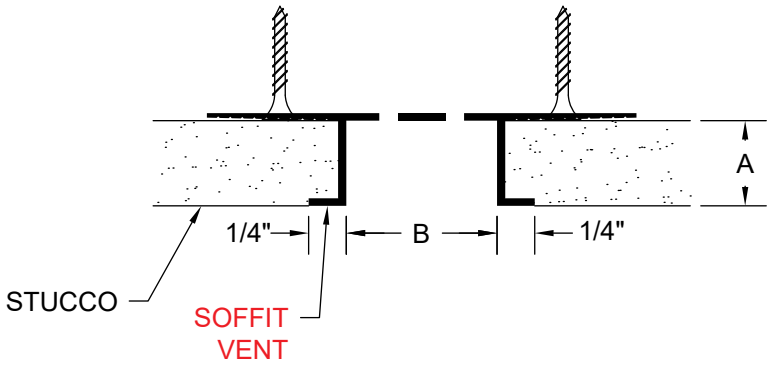

NOTES

Truform Profiles - Finish Offerings

AAMA 2604 Powder Coating

Factory finishing supplied to match custom color and gloss specifications or Standard Colors as required

Color Anodized

Color Anodized in a variety of colors and finishes
Clear Anodized in the “stocked” color

Field Paintable

Finish suitable for priming and painting in the field

Custom Fabrication

Contact factory for curving, intersections, end caps and custom colors.


3
2

Fueled by our Impassioned Innovation
and Customer Service,
We provide ...

DESIGNED
ENGINEERED
FABRICATED

products and finishes to satisfy
your design requirements.
Contact Gordon, Inc. to explore the
possibilities for your next project.



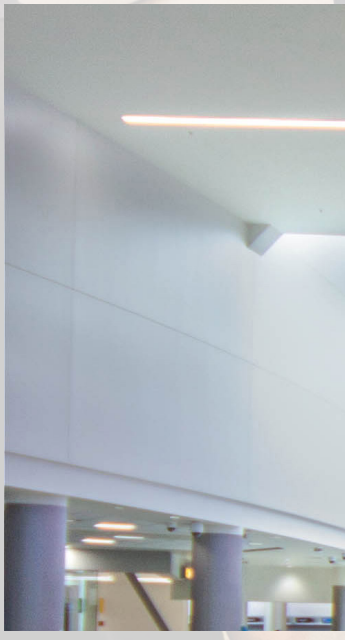



GORDON®
ARCHITECTURAL+ENGINEERED SOLUTIONS

5023 Hazel Jones Road
Bossier City, LA 71111
800-747-8954
sales@truformprofiles.com
www.truformprofiles.com

