GORDON®
ARCHITECTURAL+ENGINEERED SOLUTIONS

5023 HAZEL JONES RD., BOSSIER CITY, LA 71111
SALES@GORDON-INC.COM
800.747.8954 | GORDON-INC.COM

Rationalizing the Measurement of Noise Attenuation (Sound Transmission Class) for Partition Closures to Include Mullion Mate® Assemblies from Gordon Inc. and Competing Substitutes

Gordon, Inc.

August 15, 2024

Table of Contents

Introduction…… 3

Problem Statement……4

Background……5

Methodology……6

Procedure for Laboratory Testing……7

Results……12

Performance Tables……23

Conclusion……26

Appendix –Calculating Composite STC……27

Bibliography……34

Introduction

In modern construction and design, managing noise pollution within the built environment is becoming increasingly vital. Every space is designed to serve a specific function and there is an optimal level of noise allowed to enter or leave each space. Whether it's to meet building codes, create comfortable workspaces, or maintain privacy, ensuring effective sound management has risen to the forefront of architectural priorities. Interior walls, integral to many building designs, play a crucial role in containing or blocking sound. However, achieving optimal acoustic performance relies heavily on the gap closure products used within different framed wall assemblies.

The Sound Transmission Class (STC) rating is the standard measure for evaluating the effectiveness of an interior wall assembly in blocking airborne sound. It is influenced by various factors, with gaps and joints being among the most critical. If left unaddressed, these small openings can significantly degrade the sound transmission performance of the interior wall assembly. Understanding how different closure products perform in this context is essential for architects, engineers, and building professionals tasked with achieving high acoustic standards.

This white paper examines recent research findings to evaluate the effectiveness of various gap closure products, such as Gordon Inc.'s Mullion Mate®. It will provide insight into how different materials impact performance levels, offering guidance to architects, engineers, and building professionals seeking to optimize acoustic control. More specifically, it will show that the base interior wall assembly's performance is highly impactful when considering all components as a system. By understanding these variations, more informed decisions can be made when selecting gap closure solutions to enhance sound transmission and achieve the desired acoustic standards.

Special Note:

All Mullion Mate® (registered trademark property of Gordon Incorporated) product lines are wholly owned by Gordon Incorporated and are protected by the United States Patent and Trademark Office (USPTO).

- Mullion Mate® Snap (patent pending)
- Mullion Mate® Plus (patent pending)
- Mullion Mate® Pro (U.S. Patent 12,024,881)
- Mullion Mate® Pro FR (patent pending)

Problem Statement

The current testing methods for evaluating the acoustic performance of architectural space fillers, specifically those used to block gaps between interior walls and window mullions or glass curtain walls, are inadequate for real-world application. The industry relies on the "Standard Test Method for Laboratory Measurements of Airborne Sound Transmission Loss of Building Partitions and Elements", ASTM E90-09 (2016)[1] and ASTM E413-22[2], to assess these gap closure assemblies. However, this method focuses exclusively on laboratory conditions, using predetermined wall areas and construction types that do not reflect the complex and variable configurations encountered in actual buildings.

While ASTM E90-09(2016) measures the Sound Transmission Loss (STL) through an assembly based on a specific Sound Transmission Class (STC) rating, the results are limited to laboratory conditions and often overlook the varying wall properties and area differences seen in real-world construction. The gap filler STC is tested assuming the wall STC is significantly higher than the gap filler itself, while the composite STC is calculated from a combination of test wall STC, wall area, gap filler area, and the gap filler STC. This laboratory based composite STC can be inconsistent with real-world results due to the different end conditions and constructions.

As a result, these assessments provide only comparative numbers between assemblies in a laboratory environment, leading to potential discrepancies and confusion when applied to actual building settings. Furthermore, the lack of standardized testing protocols tailored to field applications makes it impossible to compare composite STC results consistently across competitive products. A standardized evaluation method addressing these discrepancies is urgently needed to provide a reliable basis for comparing systems and accurately estimating sound transmission loss from room to room in real-world conditions.

Background

Effective acoustic control is a crucial consideration in modern architecture, as managing noise pollution has become a priority in both commercial and residential buildings. Architects, engineers, and designers work diligently to create spaces that offer privacy and minimize noise disruption, particularly when interior walls separate different environments. Interior walls are vital to these efforts, but their performance heavily relies on the appropriate gap closure products. Gaps between Interior walls and other structural elements, such as window mullions and glass curtain walls, can significantly compromise sound transmission performance if not properly addressed.

The Sound Transmission Class (STC) rating is a primary metric used to evaluate soundproofing effectiveness, measuring the ability of a wall assembly to attenuate airborne sound. However, STC is not solely influenced by the interior wall structure; gaps and joints can act as acoustic weak points that substantially degrade overall performance. These gaps are typically addressed using architectural space fillers or closure products designed to block sound transmission at these critical junctures.

Currently, the architectural industry relies on the "Standard Test Method for Laboratory Measurements of Airborne Sound Transmission Loss of Building Partitions and Elements" (ASTM E90-09 (2016)) to evaluate the effectiveness of gap fillers. This test provides standardized conditions for assessing the Sound Transmission Loss (STL) through a partition assembly and assigns an STC rating based on the results. However, ASTM E90-09 (2016) employs a controlled laboratory setup that assumes a predetermined wall construction type and area, overlooking the variable configurations present in real-world settings.

In this testing framework, the gap filler STC is measured assuming that the wall STC is substantially higher than that of the gap filler. Additionally, the composite STC is calculated from a combination of test wall STC, wall area, gap filler area, and the gap filler STC. While these metrics provide useful comparative data between different assemblies in laboratory conditions, they often fail to capture the nuanced performance variations observed in real-world construction settings. The composite STC may be entirely inconsistent with actual building performance, as field conditions vary significantly in wall construction and gap filler end conditions.

This gap in accurate testing methods poses a significant problem for industry professionals. Without a standardized test protocol that reflects real-world scenarios, comparing composite STC results between competitive products becomes challenging. Architects, engineers, and building professionals lack the reliable data required to make well-informed decisions regarding gap closure products and their implications for acoustic control.

Recent research efforts have highlighted the necessity of revising testing protocols to include more representative real-world conditions. Such changes would provide stakeholders with a more accurate framework for comparing gap filler performance across various applications. Standardizing these evaluation methods would ensure more consistent and reliable results, enabling the industry to implement more effective soundproofing strategies.

This white paper aims to examine recent research findings on gap closure products and provide guidance for industry professionals to understand how different materials and assemblies impact acoustic performance. By analyzing these insights, stakeholders will gain a clearer understanding of how to optimize acoustic control in interior walls, ultimately enhancing the soundproofing quality of their projects.

Methodology

To perform an Airborne Sound Transmission Loss test of architectural gap fillers simulating a true field installed assembly, it is necessary to create a reference system that takes into consideration the following:

- Partition wall areas adjacent to the gap filler
- Boundaries of the gap filler
- Whether it is a window mullion or a glass pane
- STC of the interior wall assembly
- Ceiling materials
- Any additional element surrounding the gap filler that contributes to the sound propagation or absorption.

To achieve a rationalized understanding of how these elements present in a typical room or divided space affect the sound attenuation from room to room, we performed a series of tests using ASTM E90-09 (2016) with distinct setups. In these setups, the gap filler manufactured by Gordon, Inc., Mullion Mate® Plus and Mullion Mate® Pro, were tested on walls with different STCs, gap spans, and configurations mimicking true field installation boundaries. This testing was conducted at Riverbank Acoustical Laboratories in Geneva, Illinois.

By performing these different tests, we can correlate results and have an educated approximation on the expected room-to-room sound attenuation values which will be different in every case due to the influence of the total wall area on the composite STC as well as the influence of the gap filler boundaries.

After performing an array of tests with differing variables, we can derive the mathematical equations to accurately depict how different componentry as well as differing installation techniques can affect the composite STC of the system.

Procedure for Laboratory Testing

In acoustic testing, the precise setup of the testing environment is crucial for obtaining accurate and reliable results. The arrangement of the testing chamber plays a significant role in ensuring that sound measurements are consistent and repeatable. This section provides an overview of the testing chamber's configuration, detailing the layout and essential components that facilitate effective sound testing. By adhering to established standards, such as those outlined in ASTM E90-09 (2016), we can ensure that our methodologies are robust, and our results are dependable.

The overall configuration of the testing chamber consists of a sound source room and a sound receive room. These rooms are practically the same volume and are divided by an aperture that receives the test wall. For more detail on the sound equipment configuration in each of the rooms, please refer to ASTM E90-09 (2016) Annex A2. This annex covers many of the details associated with microphone placement, microphone movement, the formulary calculations associated with testing each of the frequency ranges and the statistical analysis for deriving confidence in the repeatability of testing.

The proposed method by which these evaluations were fulfilled was to first baseline different wall compositions representing different STC performance levels without the introduction of other materials such as mullions, gaps, or gap fillers. The global project specifications were as follows:

- Test aperture: 14.0 ft. wide by 9.0 ft. tall.
- Wallboard joint treatment: Acoustical caulk with metal tape.
- Track to test frame condition: Floating on sill sealer and caulked with acoustical sealant.

In the testing that was performed, two (2) different wall configurations were built and tested for this exercise: a 50 STC wall and a 65 STC wall.

The wall construction for the 50 STC wall (see Figure 1) is as follows:

Sponsor's Designation:	Baseline Steel Stud Wall (Target STC 49-51)
Track Type:	3-5/8" 25 ga EQ Steel Track
Stud Type (gauge, dimension):	3-5/8" 25 ga EQ Steel Studs
Stud Product / Manufacturer	Clark Dietrich
Stud Spacing:	24.0 in. o.c.
Cavity Insulation:	R-13 fiberglass batt insulation
Source Side acoustic treatment:	None
Source Side Wall Board (single layer)	USG 5/8" Type X Gypsum Board
Face layer screw spacing:	16" on center perimeter & field
Receive Side acoustic treatment:	None
Receive Side Wall Board (single laye	USG 5/8" Type X Gypsum Board
Layer screw spacing:	16" on center perimeter & field
Other Special Instructions:	No horizontal blocking

Wall construction is highly variable regarding fabrication styles and materials. The main goal is to attain the design STC for optimum performance of the wall and its corresponding gap closure assembly. The wall construction tables on page 7 and page 8 are what was used to conduct the testing documented in

this paper. Any construction design of either of these two walls would be expected to yield the same STC results provided the base wall STC is equal to the walls represented in these tests.

The wall construction for the 65 STC wall (see Figure 2) is as follows:

Sponsor's Designation:	Baseline Steel Stud Wall (Target STC 60+)
Track Type:	6" 20 ga Steel Track
Stud Type (gauge, dimension):	6" 20 ga Steel Studs
Stud Product / Manufacturer	Clark Dietrich
Stud Spacing:	24.0 in. o.c.
Cavity Insulation:	6" Thermafiber Mineral Wool
Source Side acoustic treatment:	Clark Dietrich RC Deluxe spaced 24" o.c.
Source Side Wall Board (base layer):	USG 5/8" Type X Gypsum Board
Face layer screw spacing:	48" on center along channel
Source Side Wall Board (face layer):	USG 5/8" Type X Gypsum Board
Face layer screw spacing:	16" on center along channel
Receive Side acoustic treatment:	None
Receive Side Wall Board (base layer):	USG 5/8" Type X Gypsum Board
Face layer screw spacing:	48" on center along channel
Receive Side Wall Board (middle layer):	USG 5/8" Type X Gypsum Board
Face layer screw spacing:	48" on center along channel
Receive Side Wall Board (face layer):	USG 5/8" Type X Gypsum Board
Face layer screw spacing:	16" on center along channel

After establishing the baseline wall varieties, we then added a two-inch by four-inch aluminum "mullion" tube to the 50 STC wall to baseline the effect of the mullion on the composite STC (see Figure 3). A mullion was tested with the 65 STC wall even though high-STC performance typically uses our Mullion Mate® Pro (see Figure 4) which by design, flanks the mullion on both sides from the end of wall to the glass. Having isolated testing of the mullion tube on both wall types enables the derivation of an equation that can see the effect of the mullion on various STC wall designs.

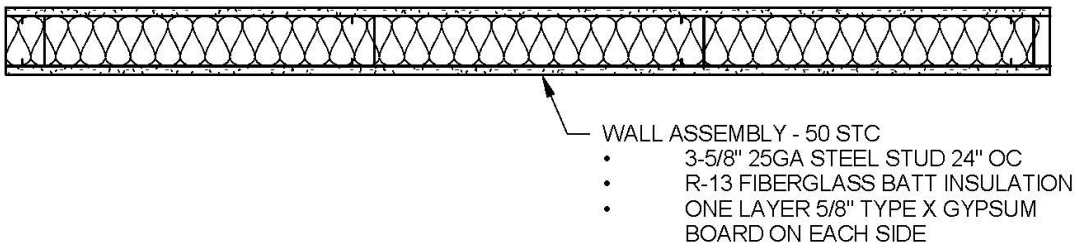

Figure 1: 50 STC Baseline Wall

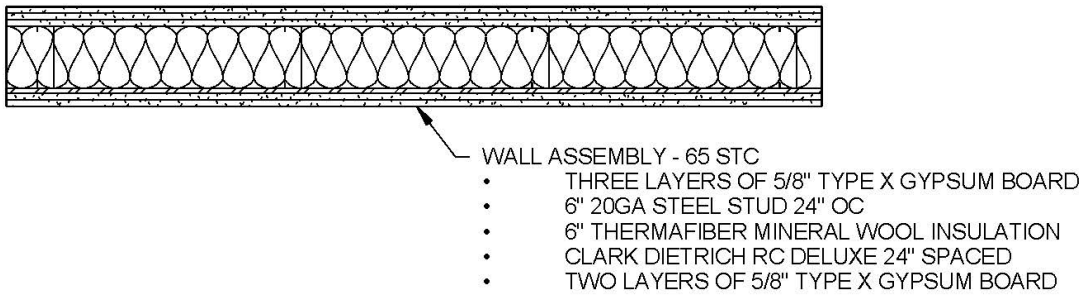

Figure 2: 65 STC Baseline Wall

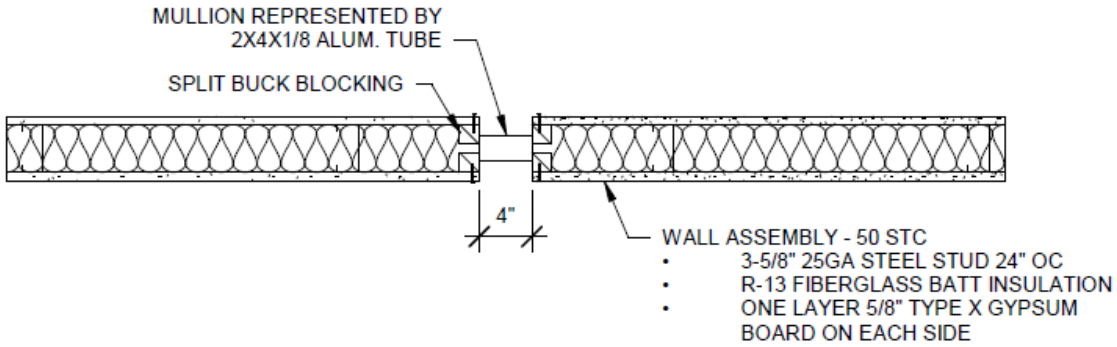

Figure 3: 50 STC Wall Shown with Mullion Only

Once these baseline configurations were established, we began a systematic evaluation of different gap sizes from four (4) inches up to fourteen (14) inches using the Mullion Mate® Plus product. This gap closure product is comprised of a telescoping pair of extrusions that creates a variable-sized filler that has opposing tension that can be inserted into the gap between interior wall and curtain wall (see Figure 5). It can be installed up to the window mullion or directly to the glass. This paper will show STC results in both applications.

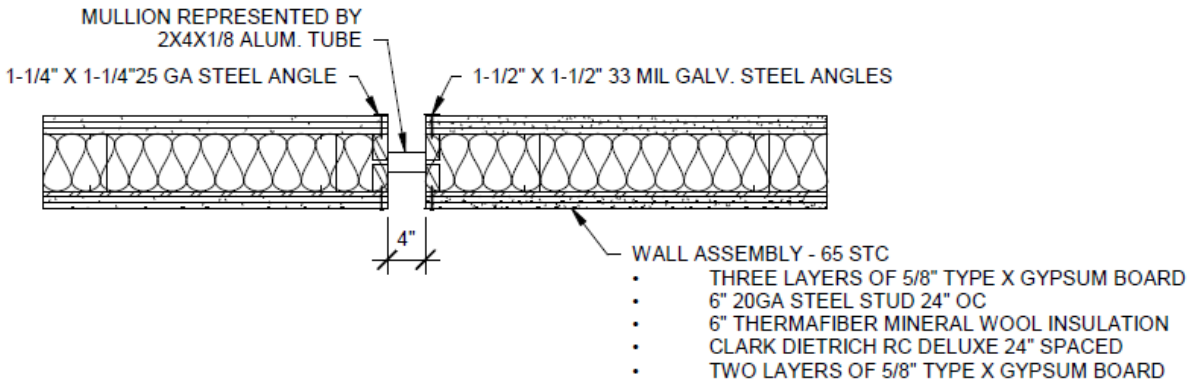

Figure 4: 65 STC Wall Shown with Mullion Only

The Mullion Mate® assembly is held in place by adhesive gaskets that are located on the mating surfaces of the assembly. These serve to hold the Mullion Mate® in place, provide a seal to the adjacent surfaces and dampen vibrational forces related to sound travel. To facilitate the installation and subsequent removal of the Mullion Mate® assemblies to accommodate the battery of tests at Riverbank Laboratories, no adhesive was used on the mating surface of the gasket to secure the Mullion Mate® assemblies in place.



Figure 5: Photograph of section view of Mullion Mate® Plus-9 showing the amount of telescopic movement of the assembly.

It is also important to note that we evaluated some specimens with and without caulk applied along the mating surfaces. The use of caulk did not contribute to enhancing the STC performance when compared to a control specimen. This indicates that the crosslinked polyethylene gasket (called out in Figure 6a) is offering a good air seal as well as excellent dampening. The mechanical compression springs located inside the Mullion Mate® assembly are also offering some amount of vibrational dampening within the structure. Based on these results, we do not recommend the use of caulk unless it is for aesthetic reasons or to mitigate imperfections in the mating locations where Mullion Mate® is installed.

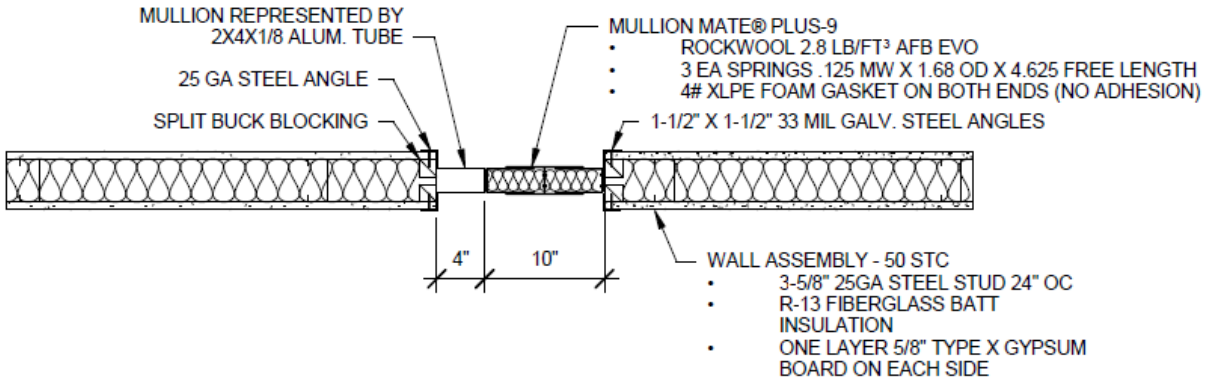

Figure 6a: 50 STC Wall Shown with Mullion Mate® Plus in a Ten-Inch Gap



Figure 6b: Photograph of 50 STC Wall Shown with Test Specimen Mullion Mate® Plus-9 represented in Figure 5a.

The total number of tests done using the two baseline walls described herein totaled twenty-one (21), some of which employed either Mullion Mate® Plus and Mullion Mate® Pro product lines, or drywall only up to the mullion. The range of gaps tested using the Mullion Mate® gap closure assemblies was between four (4) inches and fourteen (14) inches.

This design of experiment (DOE) plus another seventeen (17) tests that were performed a few years before allowed us to have a cross-section of data that would allow for algebraic interpolation to assess the performance of embodiments that fall between the ones tested. By isolating constant elements such as the wall and the mullion, we can assess, with a high degree of certainty, how different sized gap closure assemblies will perform in each wall construction.

Results

In this section we will discuss the test results and display sound transmission graphs that were used to calculate the STC of the different components and systems being evaluated. We can thoroughly review some of the tests that were performed to better understand the sound transmission properties of the key components identified in the system.

We will begin with the baseline wall and isolated mullion to provide the backdrop. Subsequently, we can look at the impact of gap size as well as the type of gap closure product to better understand how these factors ultimately affect the STC performance of the wall system. The data gathered over all thirty-eight (38) different evaluations at Riverbank Laboratories provided the necessary means to calculate much of the data that is displayed in the Performance Tables section of this paper.

TEST RESULTS

Sound transmission loss values are tabulated at the eighteen standard frequency bands. A graphic presentation of the data and additional information appear on the following pages. The precision of the transmission loss test data is within the limits set by the ASTM Standard E90-09 (2016). See Appendix A for identification of corrections applied to the reported data.

FREQ.	TL	ΔTL	DEF.	FREQ.	TL	ΔTL	DEF.
100	18	0.68	0	800	59	0.23	0
125	28	0.40	6	1000	60	0.13	0
160	33	0.64	4	1250	61	0.14	0
200	37	0.24	3	1600	56	0.13	0
250	41	0.25	2	2000	48	0.08	6
315	47	0.10	0	2500	49	0.06	5
400	49	0.14	0	3150	54	0.12	0
500	54	0.16	0	4000	57	0.06	0
630	58	0.23	0	5000	59	0.08	0

STC=50

ABBREVIATION INDEX

FREQ. = 1/3 OCTAVE BAND CENTER FREQUENCY, Hz
TL = TRANSMISSION LOSS, dB
ΔTL = 95% CONFIDENCE INTERVAL FOR TL MEASUREMENTS, dB
DEF. = DEFICIENCIES, dB BELOW SHIFTED STC CONTOUR (SUM OF DEF = 26)
STC = SOUND TRANSMISSION CLASS

Figure 7a: Results from testing 50 STC baseline wall (shown in Figure 1).

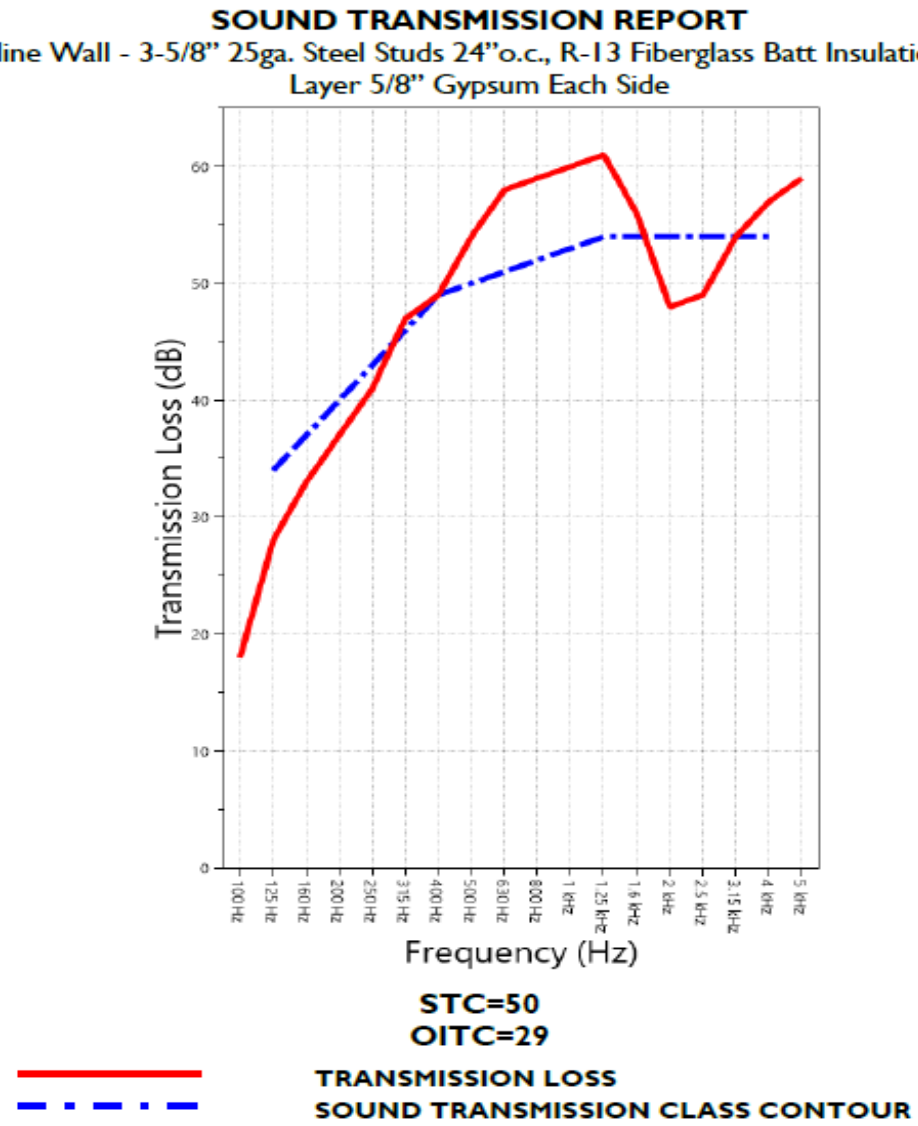

Figure 7b: Graphic results from testing 50 STC baseline wall.

The results depicted in Figures 7a and 7b show the transmission loss in both tabulated and graphical formats. The frequency of sound evaluated ranges between 100 hertz and 5000 hertz in one-third octave increments, as per ASTM E90-09 (2016). This test validates the design of the wall with respect to the target STC. For the subsequent tests that will be run, incremental amounts of this wall will be removed and replaced with the other elements of the wall system.

Figure 8 shows the performance of this wall in combination with a tube that represents the mullion. A twenty-four percent (24%) drop in STC performance is observed when testing the mullion alone in this wall system which affirms that the mullion, simply being a hollow aluminum tube, allows a significant amount of sound to transmit through the wall assembly. This inherent weakness in the mullion's ability to abate sound transmission will be evident in other test results discussed later in this paper.

TEST RESULTS

Sound transmission loss values are tabulated at the eighteen standard frequency bands. A graphic presentation of the data and additional information appear on the following pages. The precision of the transmission loss test data is within the limits set by the ASTM Standard E90-09 (2016). See Appendix A for identification of corrections applied to the reported data.

FREQ.	TL	ΔTL	DEF.	FREQ.	TL	ΔTL	DEF.
100	19	0.64	0	800	49	0.30	0
125	27	0.85	0	1000	44	0.16	0
160	33	0.48	0	1250	34	0.11	8
200	37	0.67	0	1600	34	0.13	8
250	41	0.31	0	2000	37	0.09	5
315	44	0.31	0	2500	39	0.07	3
400	47	0.22	0	3150	43	0.12	0
500	49	0.13	0	4000	49	0.12	0
630	50	0.19	0	5000	52	0.08	0

SOUND TRANSMISSION REPORT

2"X4"X1/8" Aluminum Tube as Standalone in 3-5/8" 25ga. Steel Stud Wall 24"o.c., R-13 Fiberglass Batt Insulation, One Layer 5/8" Gypsum Each Side

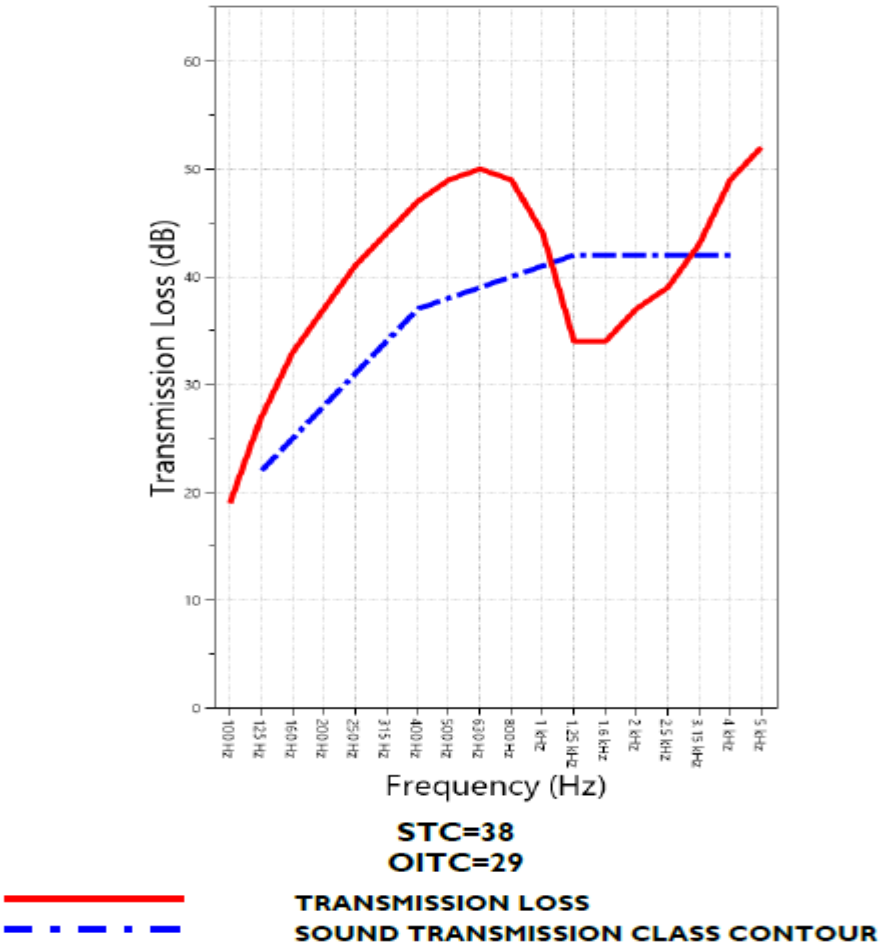

STC=38
OITC=29

TRANSMISSION LOSS
SOUND TRANSMISSION CLASS CONTOUR

Figure 8: Baseline 50 STC wall with mullion tube only.

TEST RESULTS

Sound transmission loss values are tabulated at the eighteen standard frequency bands. A graphic presentation of the data and additional information appear on the following pages. The precision of the transmission loss test data is within the limits set by the ASTM Standard E90-09 (2016). See Appendix A for identification of corrections applied to the reported data.

FREQ.	TL	ΔTL	DEF.	FREQ.	TL	ΔTL	DEF.
100	19	0.58	0	800	50	0.20	0
125	28	0.72	0	1000	46	0.12	0
160	32	0.41	0	1250	36	0.14	8
200	35	0.42	0	1600	36	0.08	8
250	37	0.38	0	2000	39	0.11	5
315	40	0.18	0	2500	40	0.12	4
400	41	0.55	0	3150	43	0.07	1
500	49	0.18	0	4000	47	0.09	0
630	51	0.15	0	5000	49	0.06	0

SOUND TRANSMISSION REPORT

Mullion Mate 3 Series 30 with 2"X4"X1/8" Aluminum Tube in 3-5/8" 25ga. Steel Stud Wall 24"o.c., R-13 Fiberglass Batt Insulation, One Layer 5/8" Gypsum Each Side

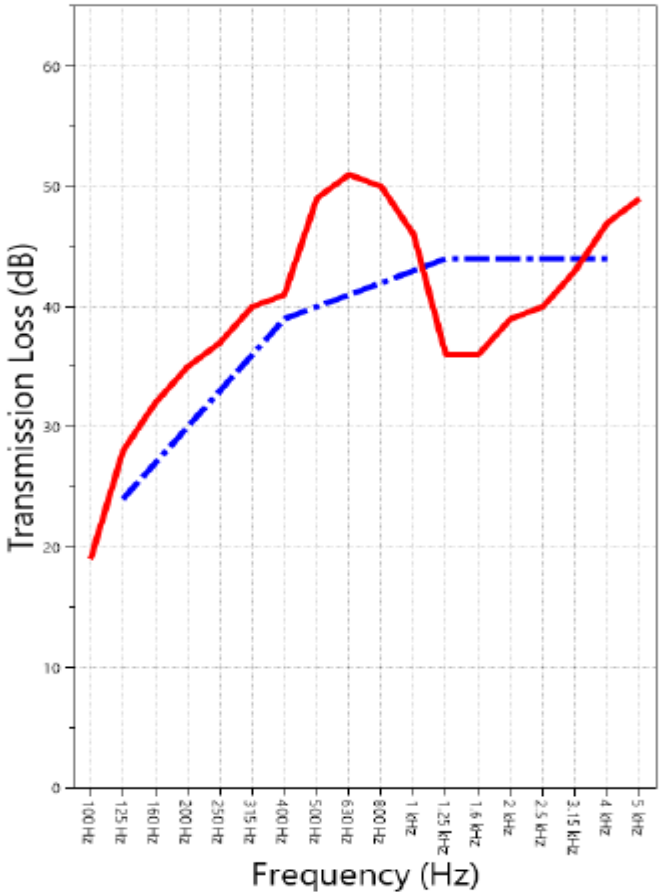

STC=40
OITC=29

TRANSMISSION LOSS
SOUND TRANSMISSION CLASS CONTOUR

Figure 9: Mullion Mate® Plus-3 against mullion tube.

TEST RESULTS

Sound transmission loss values are tabulated at the eighteen standard frequency bands. A graphic presentation of the data and additional information appear on the following pages. The precision of the transmission loss test data is within the limits set by the ASTM Standard E90-09 (2016). See Appendix A for identification of corrections applied to the reported data.

FREQ.	TL	ΔTL	DEF.	FREQ.	TL	ΔTL	DEF.
100	20	0.42	0	800	44	0.20	0
125	29	0.33	0	1000	44	0.14	0
160	33	0.28	0	1250	33	0.11	8
200	36	0.40	0	1600	35	0.07	6
250	39	0.37	0	2000	37	0.12	4
315	43	0.33	0	2500	39	0.07	2
400	44	0.27	0	3150	42	0.06	0
500	44	0.19	0	4000	46	0.05	0
630	45	0.14	0	5000	44	0.04	0

SOUND TRANSMISSION REPORT

Mullion Mate 9 Series 30 and 2"X4"X1/8" Aluminum Tube in 3-5/8" 25ga. steel stud wall 24"oc, R-13 Fiberglass Batt Insulation One Layer 5/8" Gypsum Each Side

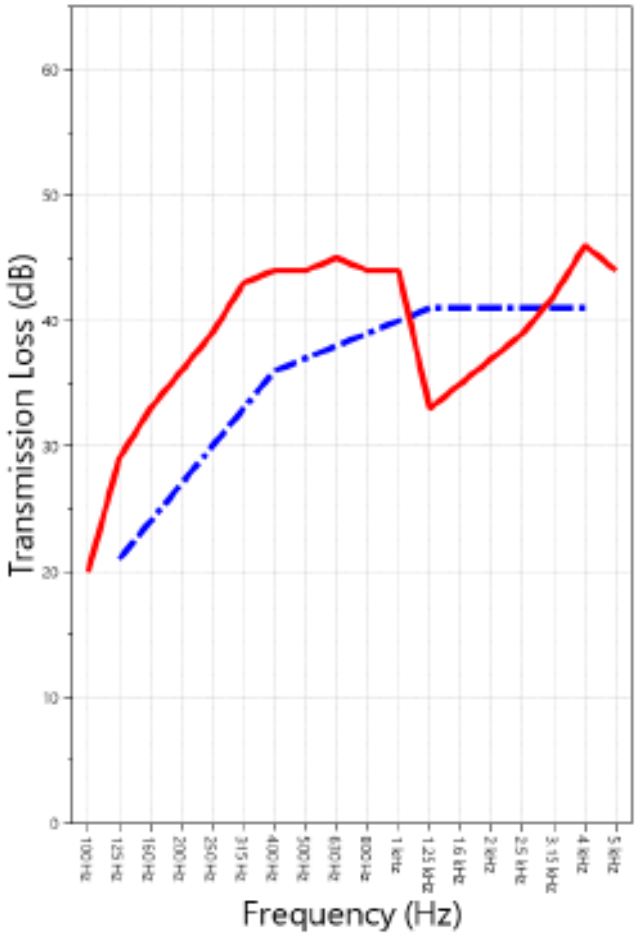

STC=37
OITC=29

TRANSMISSION LOSS
SOUND TRANSMISSION CLASS CONTOUR

Figure 10: Mullion Mate® Plus-9 against mullion tube.

Figure 9 shows the results of a test using the Mullion Mate® Plus-3 in conjunction with the 50 STC wall and mullion. The gap between the mullion and the wall is increased to 3.25 inches to allow the insertion of the Mullion Mate® Plus-3 to be installed. As shown in the results, a slight improvement (from 38 to 40) in STC is observed due to the dampening effect the Mullion Mate® assembly has on the mullion.

Figure 10 is an iteration whereby the gap between the mullion and wall is increased to 10 inches to allow the installation of a Mullion Mate® Plus-9 into the gap. The resultant STC of this test was 37, slightly below the isolated mullion evaluation which yielded 38. This result is in line with what would be expected with such a large opening and thus proving the resilience of the Mullion Mate® assembly.

Along with the other tests that were run on the 50 STC wall, a test was conducted using the Mullion Mate® Pro-7 assembly (see Figure 11), which by design, in inserted between the glass and the wall on both sides of the mullion effectively "trapping" the mullion between the Mullion Mate® assemblies. The composite STC of this test resulted in 50 which is the same as the wall tested without any gap. At this STC range, the Mullion Mate® Pro perfectly preserves the performance of the wall. The results from Riverbank Laboratories for this test can be seen in Figure 12 on the next page

Refer to Figure 2 for a detailed drawing of the high-STC (65) wall and Figure 13 for the test results from Riverbank Laboratories.

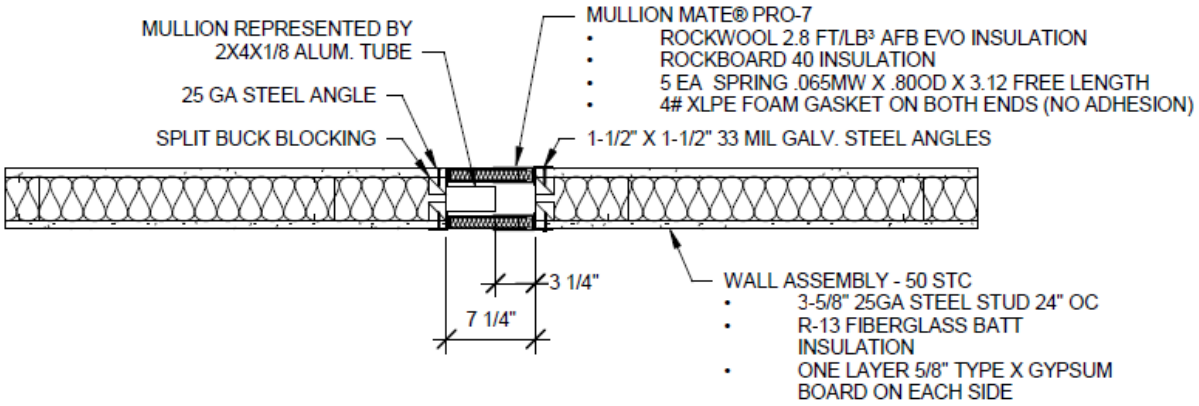

Figure 11: Mullion Mate® Pro-7

Figure 14 shows the performance of Mullion Mate® Pro-4 installed in a 65 STC wall. The gap size of four (4) inches using this product yielded a result of 62 which is the highest performance configuration that was tested. When planning spaces for high performance sound abatement, designers should consider keeping gaps between interior walls and curtain walls to a minimum. But as the data shows (see Performance Tables on Page 23), high STC conditions can be facilitated using the Mullion Mate® Pro gap closure assembly.

In another test where the gap size is increased to seven (7) inches, Mullion Mate® Pro-7 is inserted into the void and STC performance only drops four points to 58. The full results of this test are shown in Figure 15. In high-STC applications, such as the ones depicted in Figure 14 and Figure 15, the sound pressure is reduced by a significant percentage. In a noisy office, this reduction would be greater than 70%. In office areas or medical buildings where sensitive content is discussed, this level of performance would provide an adequate level of privacy. Figure 16 shows a schematic diagram illustrating this point.

TEST RESULTS

Sound transmission loss values are tabulated at the eighteen standard frequency bands. A graphic presentation of the data and additional information appear on the following pages. The precision of the transmission loss test data is within the limits set by the ASTM Standard E90-09 (2016). See Appendix A for identification of corrections applied to the reported data.

FREQ.	TL	ΔTL	DEF.	FREQ.	TL	ΔTL	DEF.
100	19	0.64	0	800	58	0.22	0
125	28	0.44	6	1000	57	0.11	0
160	32	0.65	5	1250	56	0.07	0
200	37	0.27	3	1600	55	0.12	0
250	40	0.43	3	2000	48	0.11	6
315	46	0.32	0	2500	50	0.08	4
400	48	0.17	1	3150	54	0.08	0
500	47	0.18	3	4000	54	0.06	0
630	51	0.16	0	5000	53	0.08	0

SOUND TRANSMISSION REPORT

Mullion Mate 7 Series 60 (Sor. & Rec. side) with 2"X4"X1/8" Aluminum Tube in 3-5/8" 25ga. steel stud wall 24"oc, R-13 Fiberglass Batt Insulation One Layer 5/8" Gypsum Each Side

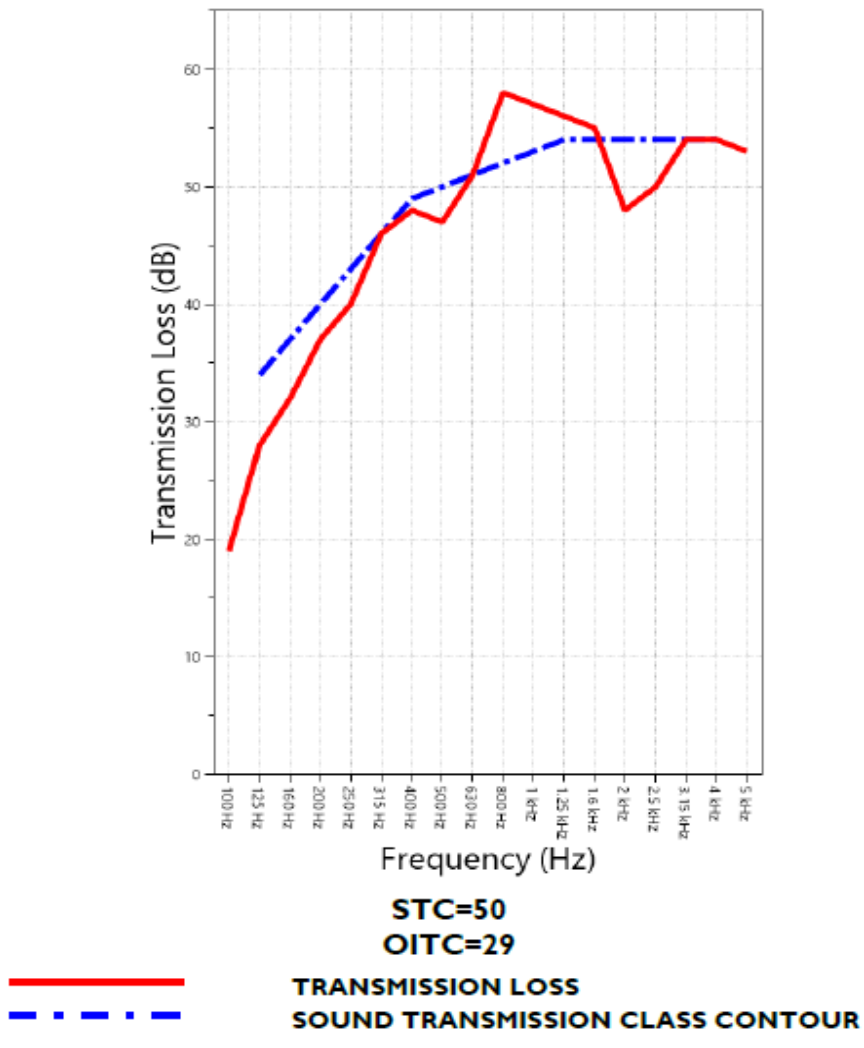

STC=50
OITC=29

TRANSMISSION LOSS
SOUND TRANSMISSION CLASS CONTOUR

Figure 12: Mullion Mate® Pro-7 installed in 50 STC wall.

TEST RESULTS

Sound transmission loss values are tabulated at the eighteen standard frequency bands. A graphic presentation of the data and additional information appear on the following pages. The precision of the transmission loss test data is within the limits set by the ASTM Standard E90-09 (2016). See Appendix A for identification of corrections applied to the reported data.

FREQ.	TL	ΔTL	DEF.	FREQ.	TL	ΔTL	DEF.
100	41	0.69	0	800	71	0.18	0
125	46	0.59	3	1000	69	0.16	0
160	49	0.45	3	1250	69	0.09	0
200	53	0.26	2	1600	68	0.10	1
250	55	0.20	3	2000	62	0.09	7
315	61	0.26	0	2500	65	0.10	4
400	64	0.23	0	3150	69	0.09	0
500	68	0.17	0	4000	73	0.06	0
630	70	0.21	0	5000	76	0.07	0

SOUND TRANSMISSION REPORT

Baseline wall 6" 20ga. Steel Stud 24"oc, 6" Mineral Wool, Sor. 2 layers 5/8" Gypsum with RC. Rec. 3 layers 5/8" Gypsum

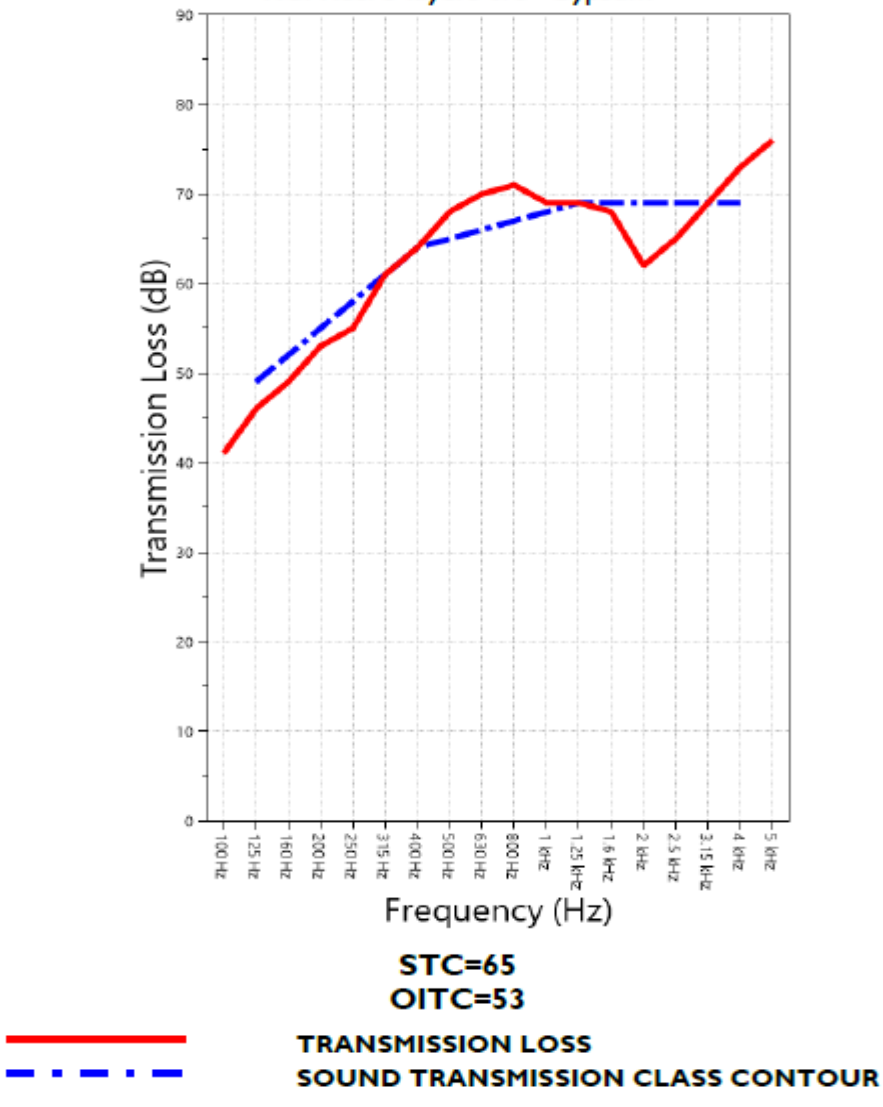

Figure 13: Results for baseline wall for 65 STC

TEST RESULTS

Sound transmission loss values are tabulated at the eighteen standard frequency bands. A graphic presentation of the data and additional information appear on the following pages. The precision of the transmission loss test data is within the limits set by the ASTM Standard E90-09 (2016). See Appendix A for identification of corrections applied to the reported data.

FREQ.	TL	ΔTL	DEF.	FREQ.	TL	ΔTL	DEF.
100	39	0.57	0	800	68	0.11	0
125	44	0.53	2	1000	67	0.14	0
160	46	0.48	3	1250	67	0.07	0
200	48	0.35	4	1600	66	0.11	0
250	50	0.35	5	2000	61	0.10	5
315	55	0.36	3	2500	64	0.06	2
400	59	0.24	2	3150	69	0.10	0
500	62	0.19	0	4000	73	0.06	0
630	65	0.16	0	5000	75	0.04	0

SOUND TRANSMISSION REPORT

Dbl. Mullion Mate 4 series 60 (4" wide gap) w/2"X4"X1/8" Aluminum Tube in 6" 20ga. Steel Stud wall 24"oc, 6" Mineral Wool, Sor. 2 layers 5/8" Gypsum with RC. Rec. 3 layers 5/8" Gypsum

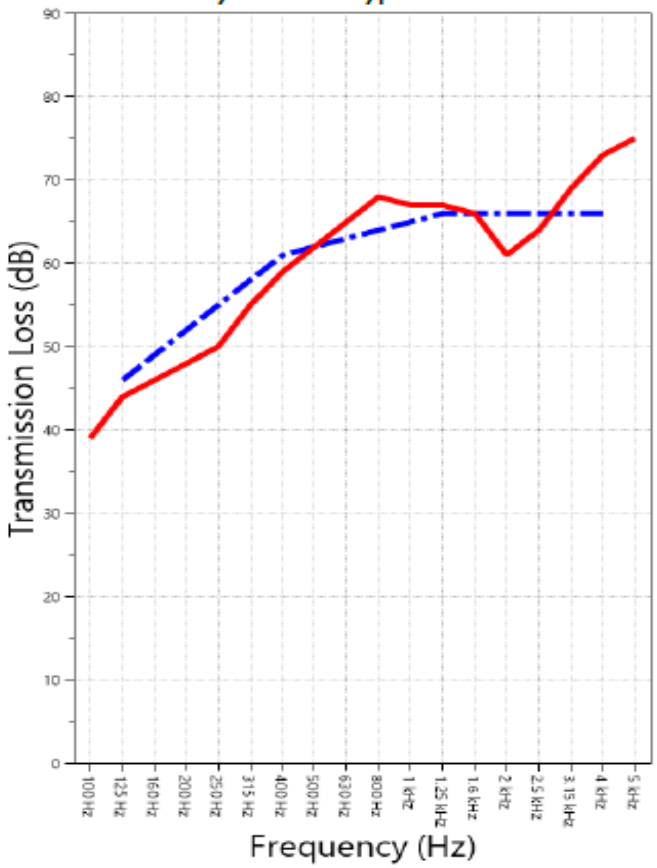

STC=62

OITC=50

TRANSMISSION LOSS

SOUND TRANSMISSION CLASS CONTOUR

Figure 14: Mullion Mate® Pro-4 in 65 STC wall

TEST RESULTS

Sound transmission loss values are tabulated at the eighteen standard frequency bands. A graphic presentation of the data and additional information appear on the following pages. The precision of the transmission loss test data is within the limits set by the ASTM Standard E90-09 (2016). See Appendix A for identification of corrections applied to the reported data.

FREQ.	TL	ΔTL	DEF.	FREQ.	TL	ΔTL	DEF.
100	40	0.40	0	800	67	0.13	0
125	45	0.30	0	1000	66	0.18	0
160	47	0.47	0	1250	64	0.09	0
200	49	0.35	0	1600	65	0.08	0
250	51	0.24	0	2000	60	0.10	2
315	56	0.24	0	2500	63	0.09	0
400	57	0.26	0	3150	65	0.06	0
500	50	0.15	8	4000	64	0.09	0
630	56	0.25	3	5000	63	0.09	0

SOUND TRANSMISSION REPORT

Dbl. Mullion Mate 7 series 60 (7" wide gap) w/2"X4"X1/8" Aluminum Tube in 6" 20ga. Steel Stud wall 24"oc, 6" Mineral Wool, Sor. 2 layers 5/8" Gypsum with RC. Rec. 3 layers 5/8" Gypsum

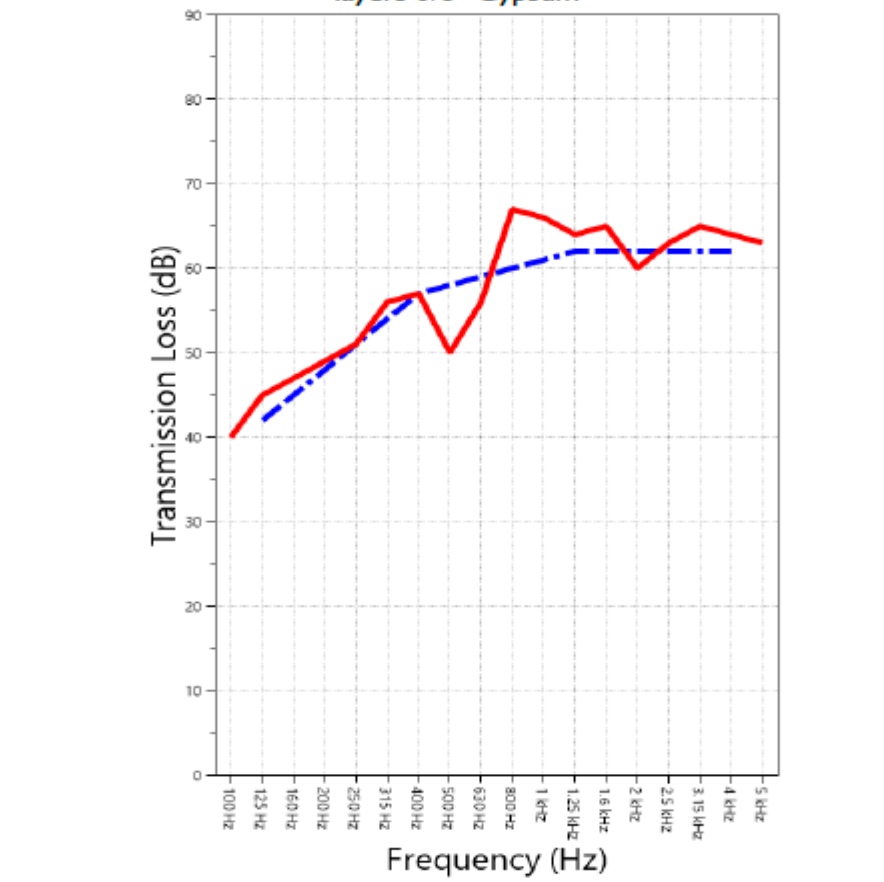

STC=58
OITC=51

TRANSMISSION LOSS
SOUND TRANSMISSION CLASS CONTOUR

Figure 15: Mullion Mate® Pro-7 in 65 STC wall

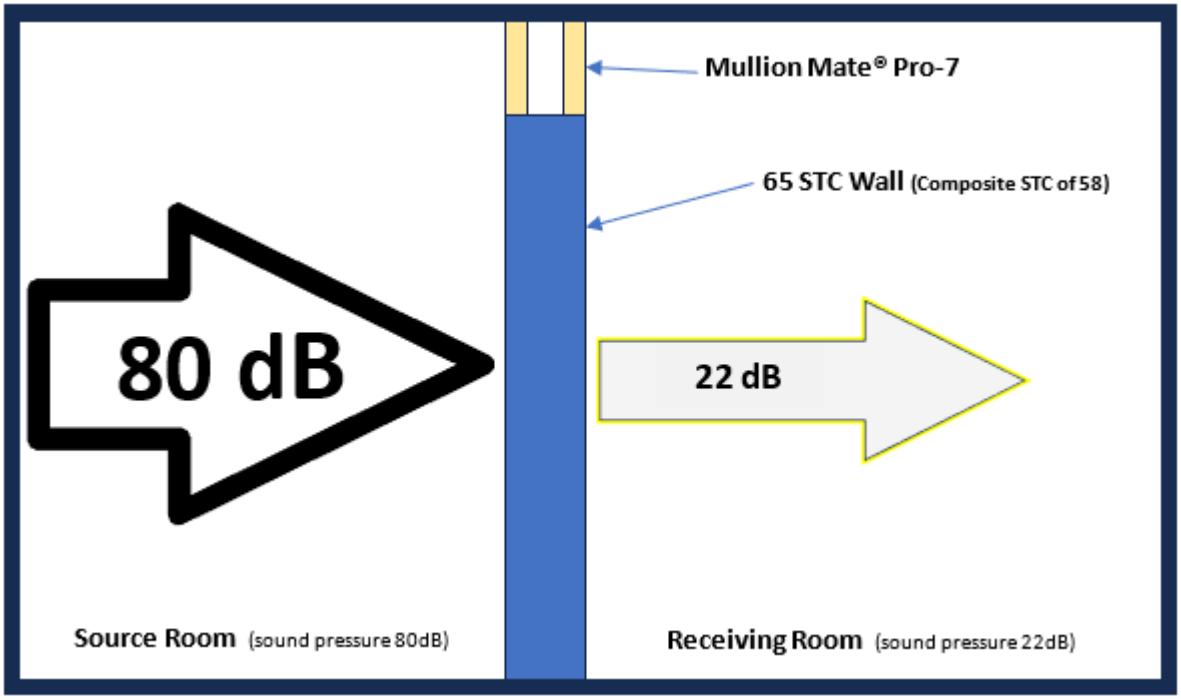

Figure 16: The effect of STC on Sound Abatement (plan view)

In Figure 16, a Mullion Mate® Pro-7 assembly is installed in a seven (7) inch gap at the end of a 65 STC wall. With a composite STC of 58, the reduction in sound pressure from the source room to the receiving room is 58 decibels. This example represents what would be present in a noisy office whereby the realized sound in the receiving room would be very faint, which is desirable in private spaces. The table shown in Figure 17 describes the application of different Mullion Mate® assemblies in conjunction with different wall STC and the performance associated with each combination.

Product	Wall STC	Comp STC	Gap (in)	Performance	Description
Mullion Mate® Pro	65	59-62	4 to 7	Excellent	Loud sounds heard faintly
Mullion Mate® Pro	50	49-50	4 to 8.5	V. Good	Loud speech heard faintly
Mullion Mate® Plus[1]	50	39-45	4 to 13	Good	Loud speech heard but not intelligible
Mullion Mate® Plus[2]	40	32-35	4 to 13	Fair	Loud speech understood

[1] Installation against the glass

[2] Installation against the mullion

Figure 17: Various applications of Mullion Mate® and resultant performance

It is important to note that the pairing of Mullion Mate® products with the appropriate wall construction is important for value and performance. The tables in the following section will illustrate these relationships and aid in the most appropriate product selection considering the performance needed as well as the other relevant conditions.

Performance Tables

The STC results derived from Riverbank Laboratories testing are displayed below in the following tables in three categories that are based on installation and product line selection. Mullion Mate® Plus can be installed either against the mullion or against the glass depending on the specific condition, thus the separate datasets for this product. Keep in mind that these results represent the composite system as a whole and are not representative of any single component on its own.

Mullion Mate® Plus (Against the Mullion)								
Patent Pending		Baseline Wall STC						
		35	40	45	50	55	60	65
Mullion Mate® Plus - 2	2.0" Gap	34	34	35	36	37	39	41
	2.5" Gap	34	34	35	36	37	38	40
Mullion Mate® Plus - 3	3.0" Gap	34	34	35	36	37	37	38
	3.5" Gap	34	34	35	36	37	37	38
Mullion Mate® Plus - 4	4.0" Gap	34	34	35	36	37	37	38
	4.5" Gap	34	34	35	36	37	37	38
Mullion Mate® Plus - 5	5.0" Gap	34	34	35	36	37	37	38
	5.5" Gap	33	34	35	36	37	37	38
	6.0" Gap	33	34	35	36	37	37	38
	6.5" Gap	33	34	35	36	37	37	38
Mullion Mate® Plus - 7	7.0" Gap	32	34	34	36	36	37	38
	7.5" Gap	32	34	34	36	36	37	38
	8.0" Gap	32	34	34	36	36	37	37
	8.5" Gap	32	34	34	36	36	37	37
Mullion Mate® Plus - 9	9.0" Gap	32	33	34	36	36	37	37
	10.0" Gap	31	33	34	36	36	37	36
	12.0" Gap	30	32	33	35	35	35	35
	13.5" Gap	30	32	33	35	35	35	35

Since the mullion is the weakest component of the system, the results of the above table are lower than the results of the same products (listed in the next table) whereby the Mullion Mate® is installed up to the glass. These differences grow exponentially as the baseline wall STC increases through each of the progressions.

Mullion Mate® Plus (Against the Glass)								
Patent Pending		Baseline Wall STC						
		35	40	45	50	55	60	65
Mullion Mate® Plus - 2	2.0" Gap	35	38	42	45	49	54	58
	2.5" Gap	35	38	42	45	49	54	58
Mullion Mate® Plus - 3	3.0" Gap	35	38	41	45	49	53	57
	3.5" Gap	35	38	41	45	49	53	57
Mullion Mate® Plus - 4	4.0" Gap	34	37	40	44	48	52	56
	4.5" Gap	34	37	40	44	48	52	56
Mullion Mate® Plus - 5	5.0" Gap	34	37	40	44	48	52	56
	5.5" Gap	34	37	40	44	48	52	56
	6.0" Gap	34	37	40	44	48	52	56
	6.5" Gap	34	37	40	44	48	52	56
Mullion Mate® Plus - 7	7.0" Gap	33	35	36	38	39	41	43
	7.5" Gap	33	34	36	37	39	40	42
	8.0" Gap	32	34	35	37	38	40	41
	8.5" Gap	32	33	35	36	38	39	41
Mullion Mate® Plus - 9	9.0" Gap	32	33	35	36	37	39	40
	10.0" Gap	31	32	34	35	36	38	39
	12.0" Gap	31	32	33	34	34	35	36
	13.5" Gap	31	32	32	33	33	34	34

As the chart shows, the performance of Mullion Mate® Plus against the glass shows very little drop-off from the base wall STC, even as the gap widens significantly. In conditions where the Mullion Mate® can be installed to the glass, the Plus Series performs nearly as well as the Pro Series which can be an added value if the conditions permit.

The biggest deviation in performance can be observed at the Mullion Mate® Plus 7 and Plus 9 sections which is due to the added extrusion to facilitate fitment in wider gap applications. This third extrusion member has a negative in the higher STC range most likely due to its susceptibility to resonant frequencies and vibrational forces.

By design, Mullion Mate® Pro (performance table on following page) is designed to be installed in a manner that traps the mullion between the two gap-closure assemblies, optimizing it for the highest possible STC performance. The Pro Series is the highest performing gap closure product of the Mullion Mate® product line as it can provide excellent sound abatement with or without the presence of the mullion. Due to its twin assembly configuration, it can also be installed with a monolithic appearance on both sides of the wall for enhancing the aesthetics of the application.

Mullion Mate® Pro (Patent 12,024,881)					
		Baseline Wall STC			
		50	55	60	65
Mullion Mate® Pro - 4	4.0" Gap	50	54	58	62
	4.5" Gap	50	53	57	61
	5.0" Gap	50	53	57	60
Mullion Mate® Pro - 5.5	5.5" Gap	50	53	57	61
	6.0" Gap	50	53	56	59
	6.5" Gap	50	53	56	59
Mullion Mate® Pro - 7	7.0" Gap	50	53	55	58
	7.5" Gap	48	51	54	56
	8.0" Gap	46	48	51	54
	8.5" Gap	44	46	48	50

Conclusion

The results shown in the three tables must be addressed separately. As noted in the procedure, there were baseline tests done on two walls, namely 50 and 65 STC. In addition, the mullion tube was also tested in isolation with each of the walls to establish that variable baseline. These combinations are among the nearly 40 individual tests that Gordon, Inc. has conducted at the Riverbank facility over several years. The tests were designed in such a way to allow accurate interpolation of adjacent conditions allowing the construction of the data tables displayed in the previous section.

With that in mind, we can maintain that:

- The STC value is a result of a complex set of calculations that considers the sound dampening of the specimen (test sample) and filler (wall) over a range of frequencies.
- If the material of the specimen is homogeneous, the STC is proportional to the specimen area.
- High STC walls (STC of 60 and greater) must be matched with Mullion Mate® Pro (if mullion is present) or Mullion Mate® Plus (if attaching directly to the glass) gap closures. When testing the standard STC wall, adding the high STC Mullion Mate will not have a significant affect due to its small relevant area compared to the wall.
- For the configurations tested, the STC of the wall dictates the high limit of the composite STC.
- Regardless of the STC of the wall and gap closure, the resulting composite STC is dictated by the weakest barrier of sound attenuation which is the window mullion.
- Installation techniques and accuracy can contribute negatively to sound abatement performance if there are air leaks or alignment issues.

Appendix: Calculating Composite STC

As previously discussed in this paper, the data presented in the Performance Tables section was compiled from the results of approximately forty tests conducted during three separate visits to Riverbank Laboratories. To develop a functional tool, it was essential to analyze the test results in a way that established the relationships between the variables and their respective impacts on STC.

It is important to note that each data series corresponds to a fixed set of conditions. For instance, specific construction types of Mullion Mate® and their respective installation styles, such as Mullion Mate® Plus, which can be installed against the glass or the mullion. These tests revealed that the mullion tube significantly reduces resistance to sound transmission. Conversely, installing Mullion Mate® Plus against the glass results in higher STC performance.

Within each series, the variable altered in each iteration was the width of the gap filled by the Mullion Mate® assembly. Another key variable considered when presenting the data was the base wall STC construction. Over the course of the testing sessions at Riverbank Laboratories, we evaluated Mullion Mate® products within 35, 50, and 65 STC wall configurations.

An analysis of the actual test results shows a non-linear relationship between the data points. A series of polynomials were sequentially derived from the tested STC results and used to estimate the untested gap dimensions. Each embodiment is listed below, in separate sections to describe the steps involved in interpolating results for configurations that were not tested.

Mullion Mate® Plus Installed Against the Mullion

Mullion Mate® Plus, when installed against a mullion, provides the least sound abatement of the three configurations. This is primarily due to the mullion itself, which is essentially a hollow aluminum tube that easily transmits resonant frequencies and vibrational forces. In this scenario, Mullion Mate® functions merely as a gap filler, without contributing significantly to sound reduction.

Despite the lower acoustic performance, thorough testing was conducted, followed by interpolation calculations to present the results in the corresponding table (see page 23). The narrow distribution of STC data points across the different configurations meant that fewer calculations were necessary to derive the complete spectrum of data.

Focusing on Mullion Mate® Plus installed against the mullion, we begin with the column corresponding to a baseline wall STC of 50. With data points at gap sizes of 3.5", 6.0", 6.5", and 10", we derived our first polynomial to solve for the missing data fields. Given that the area of the gap closure has a significant impact on the system's overall performance, this variable was found to be effective in generating a reliable formula for estimating the unknown data points. Refer to Figure A1 on the next page which shows actual test results in red and presumptive results displayed in black.

From this initial set of data, we use an AI tool to sequentially derive polynomials to solve for the missing data fields. Because this product configuration is not commonly used for high-performance sound abatement, we will not discuss, in great detail, the calculations for these results. The methods used to do this are described in much greater detail in the Mullion Mate® Pro section starting on page 31.

Mullion Mate® Plus (Against the Mullion)								
Patent Pending		Baseline Wall STC						
		35	40	45	50	55	60	65
Mullion Mate® Plus - 2	2.0" Gap	34						
	2.5" Gap	34						
Mullion Mate® Plus - 3	3.0" Gap	34						38
	3.5" Gap	34						38
Mullion Mate® Plus - 4	4.0" Gap	34						38
	4.5" Gap	34			36			38
Mullion Mate® Plus - 5	5.0" Gap	34			36			38
	5.5" Gap				36			38
	6.0" Gap				36			38
	6.5" Gap				36			38
Mullion Mate® Plus - 7	7.0" Gap				36			
	7.5" Gap				36			
	8.0" Gap				36			
	8.5" Gap				36			
Mullion Mate® Plus - 9	9.0" Gap				36			
	10.0" Gap				36			
	12.0" Gap							
	13.5" Gap							

Figure A1

Mullion Mate® Plus Installed Against the Glass (no mullion present)

When using Mullion Mate® Plus in applications where there is no mullion, there is remarkable improvement in STC performance across the spectrum, but particularly in the Mullion Mate® Plus 2 through Mullion Mate® Plus 5. In applications where the gap to be filled exceeds seven (7) inches, an extra extrusion is required to help span the gap. This assembly, used in Mullion Mate® Plus 7 and Mullion Mate® Plus 9, allows more resonant frequencies and other vibrational forces to penetrate. This impact on performance can be seen in the table on page 24. Interestingly, this scenario was not evident in the Mullion Mate® Plus against the mullion due to the impact of the mullion on sound abatement performance that has already been noted.

In the interpolation mathematics used on this table, the two parts of the table were calculated independently from one another to account for the change in construction (and in performance), which effectively, changes the slope of the equations as we go from the Mullion Mate® Plus 5 to the Mullion Mate® Plus 7. Please refer to Figure A2 on the next page which shows the test results obtained in red and the presumptive results in black, which provides a basis for deriving the polynomials required to solve for the missing data points. The yellow line shows the break in the table whereby calculations are separated.

Looking at the data points above the yellow line in figure A2, it is obvious that the distribution across the different gap ranges is not bound to change very much as the respective composite readings between a 35 STC base wall and a 65 STC base wall are very close between a two-inch gap and a six and a half-inch gap.

Mullion Mate® Plus (Against the Glass)								
Patent Pending		Baseline Wall STC						
		35	40	45	50	55	60	65
Mullion Mate® Plus - 2	2.0" Gap	35						58
	2.5" Gap	35						
Mullion Mate® Plus - 3	3.0" Gap	35						
	3.5" Gap	35						
Mullion Mate® Plus - 4	4.0" Gap	34						
	4.5" Gap	34						
Mullion Mate® Plus - 5	5.0" Gap	34						
	5.5" Gap	34						56
	6.0" Gap	34						56
	6.5" Gap	34						56
Mullion Mate® Plus - 7	7.0" Gap	33						43
	7.5" Gap							42
	8.0" Gap							41
	8.5" Gap	32						41
Mullion Mate® Plus - 9	9.0" Gap							
	10.0" Gap							
	12.0" Gap							
	13.5" Gap							

Figure A2

Using the AI tool, we must first solve for the missing data point in the 65 STC base wall column. The points were entered as (gap size, composite STC), as such:

(2,58), (2.5,?), (3.0,?), (3.5,?), (4,?), (4.5.?), (5,?), (5.5,56), (6.0,56), (6.5,56)

This yields the equation:

$$Y = 0.126X^2 - 1.51X + 60.52$$

Plugging in our various X values yields the data:

(2,58), (2.5,58), (3.0,57), (3.5,57), (4,56), (4.5.56), (5,56), (5.5,56), (6.0,56), (6.5,56)

With this portion solved, we can begin solving each of the horizontal rows sequentially until the table is filled. That series of equations is as follows:

- At 2.0-inch gap : $Y = 0.0045X^2 + 0.315X + 18.45$
- At 2.5-inch gap : $Y = 0.0045X^2 + 0.315X + 18.45$
- At 3.0-inch gap : $Y = 0.0042X^2 + 0.309X + 18.98$
- At 3.5-inch gap : $Y = 0.0042X^2 + 0.309X + 18.98$
- At 4.0-inch gap : $Y = 0.0043X^2 + 0.304X + 18.11$
- At 4.5-inch gap : $Y = 0.0043X^2 + 0.304X + 18.11$
- At 5.0-inch gap : $Y = 0.0043X^2 + 0.304X + 18.11$
- At 5.5-inch gap : $Y = 0.0043X^2 + 0.304X + 18.11$
- At 6.0-inch gap : $Y = 0.0043X^2 + 0.304X + 18.11$
- At 6.5-inch gap : $Y = 0.0043X^2 + 0.304X + 18.11$

As mentioned above, the low delta associated with the original numbers lends itself to generating only a few different equations to solve for the missing data points. Figure A3 shows the results of these calculations in black, input values in red which solve for the Mullion Mate® Plus 2 through Mullion

Mate® Plus 5 assemblies. As previously mentioned, the bottom half of the chart will be calculated separately due to its different anatomy.

Mullion Mate® Plus (Against the Glass)								
Patent Pending		Baseline Wall STC						
		35	40	45	50	55	60	65
Mullion Mate® Plus - 2	2.0" Gap	35	38	42	45	49	54	58
	2.5" Gap	35	38	42	45	49	54	58
Mullion Mate® Plus - 3	3.0" Gap	35	38	41	45	49	53	57
	3.5" Gap	35	38	41	45	49	53	57
Mullion Mate® Plus - 4	4.0" Gap	34	37	40	44	48	52	56
	4.5" Gap	34	37	40	44	48	52	56
Mullion Mate® Plus - 5	5.0" Gap	34	37	40	44	48	52	56
	5.5" Gap	34	37	40	44	48	52	56
	6.0" Gap	34	37	40	44	48	52	56
	6.5" Gap	34	37	40	44	48	52	56
Mullion Mate® Plus - 7	7.0" Gap	33						43
	7.5" Gap							42
	8.0" Gap							41
	8.5" Gap	32						41
Mullion Mate® Plus - 9	9.0" Gap							
	10.0" Gap							
	12.0" Gap							
	13.5" Gap							

Figure A3

The next set of calculations will solve for the Mullion Mate® Plus 7 and Mullion Mate® Plus 9 assemblies starting with the column at the far right consisting of the 65 STC base wall fields. Taking the known values along with the unknown the following points were entered into the AI tool to generate an the following set of points:

(7,43), (7.5,42), (8.0,41), (8.5,41), (9,?), (10.?), (12,?), (13.5,?)

The equation $Y = 0.0155X^2 – 1.675X + 53.79$ was derived and yields the following points:

(7,43), (7.5,42), (8.0,41), (8.5,41), (9,40), (10.39), (12,36), (13.5,34)

The next calculation uses the same method but for the 35 STC base wall column. This is followed by solving for the missing fields in each gap row (shown in black) in sequence which yields the data shown in Figure A4. The equations generated for this part of the exercise are as follows:

- For STC 35 Base Wall $Y=0.072X^2 – 1.78X + 41.94$
- At 7.0-inch gap : $Y = 0.001X^2 + 0.23X + 23.62$
- At 7.5-inch gap : $Y = 7.26 * 10^{-4}X^2 + 0.227X + 24.15$
- At 8.0-inch gap : $Y = -0.0011X^2 - 0.23X + 22.74$
- At 8.5-inch gap : $Y = 7.8 * 10^{-4}X^2 + 0.22X + 23.27$
- At 9.0-inch gap : $Y = 5.01 * 10^{-4}X^2 + 0.217X + 23.81$
- At 10.0-inch gap : $Y = 5.55 * 10^{-4}X^2 + 0.21X + 22.93$
- At 12.0-inch gap : $Y = -2.81 * 10^{-4}X^2 + 0.195X + 24.52$
- At 13.5-inch gap : $Y = -8.39 * 10^{-4}X^2 + 0.184X + 25.59$

Mullion Mate® Plus (Against the Glass)								
Patent Pending		Baseline Wall STC						
		35	40	45	50	55	60	65
Mullion Mate® Plus - 2	2.0" Gap	35	38	42	45	49	54	58
	2.5" Gap	35	38	42	45	49	54	58
Mullion Mate® Plus - 3	3.0" Gap	35	38	41	45	49	53	57
	3.5" Gap	35	38	41	45	49	53	57
Mullion Mate® Plus - 4	4.0" Gap	34	37	40	44	48	52	56
	4.5" Gap	34	37	40	44	48	52	56
Mullion Mate® Plus - 5	5.0" Gap	34	37	40	44	48	52	56
	5.5" Gap	34	37	40	44	48	52	56
	6.0" Gap	34	37	40	44	48	52	56
	6.5" Gap	34	37	40	44	48	52	56
Mullion Mate® Plus - 7	7.0" Gap	33	35	36	38	39	41	43
	7.5" Gap	33	34	36	37	39	40	42
	8.0" Gap	32	34	35	37	38	40	41
	8.5" Gap	32	33	35	36	38	39	41
Mullion Mate® Plus - 9	9.0" Gap	32	33	35	36	37	39	40
	10.0" Gap	31	32	34	35	36	38	39
	12.0" Gap	31	32	33	34	34	35	36
	13.5" Gap	31	32	32	33	33	34	34

Figure A4

The remaining numbers, shown in black, were calculated using the equations and complete the sections of the table related to the performance of Mullion Mate® Plus 7 and Mullion Mate® Plus 9 assemblies.

Mullion Mate® Pro

Looking at the interpolation for the Mullion Mate® Pro, the initial focus is placed on the changing gap sizes as tested in a 65 STC wall, as this creates the highest performing combination of variables. On this line of the performance chart, there are ten (10) gap sizes listed from four (4) inches to eight and a half (8.5) inches, in half inch intervals. During the Riverbank testing, we have actual test results for four of these intervals, namely, four (4), five (5), seven (7), and eight and a half-inches (8.5). The STC results of those, respectively were: 62, 60, 58, and 50.

Taking these four sets of numbers, we want to derive a polynomial that confirms these datapoints and allows us to solve for the unknown STC values. Stating the gap as x (in inches) and STC as y, more specifically (x, y) we have the following points:

(4, 62), (5,60), (7, 58) and (8.5, 50)

The objective is to solve the following array:

(4.5, ?), (5.5, ?), (6, ?), (6.5, ?), (7.5, ?), and (8, ?)

Using the AI math tool, the known data set is input as well as the coordinates that are to be solved for using the known data points. The software produces a polynomial of third degree as follows:

$$y = -0.35x^3 + 5.92x^2 - 33.98x + 125.56$$

The results from this equation applied over the data array yield results to three decimal places which are subsequently rounded to the nearest whole number. This equation can satisfy the resultant STC performance for the spectrum of gap sizes using a 65 STC wall.

Those results are as follows:

(4.5, 61), (5.5,60), (6, 59), (6.5, 59), (7.5, 56), and (8,54)

Additionally, we had a test using Mullion Mate® Pro in a 50 STC wall at a gap of seven (7) inches which yielded a 50 STC in Riverbank Laboratory testing. With this result, we can safely assume that the gap sizes less than seven inches will also yield an STC value of 50. Since we have concluded that the STC of the wall dictates the maximum composite STC that can be attained, the high limit of STC for gaps less than seven (7) inches is fixed at 50. This gives us 6 more data points from which additional equations can be derived.

At this point we have the following information (data in red are actual test results):

Mullion Mate® Pro (Patent 12,024,881)

		Baseline Wall STC			
		50	55	60	65
Mullion Mate® Pro - 4	4.0" Gap	50			62
	4.5" Gap	50			61
	5.0" Gap	50			60
Mullion Mate® Pro - 5.5	5.5" Gap	50			61
	6.0" Gap	50			59
	6.5" Gap	50			59
Mullion Mate® Pro - 7	7.0" Gap	50			58
	7.5" Gap				56
	8.0" Gap				54
	8.5" Gap				50

To solve for walls that have STC values other than what was tested, which in the case of Mullion Mate® Pro was the 55 STC and 60 STC variants, we can associate the calculated values at the 50 STC and 65 STC baseline walls to solve for the unknowns that fall between.

To do this, two approaches were evaluated: a linear relationship and a quadratic equation relationship. Since we have already established a slightly non-linear relationship across the spectrum of data, the quadratic equation method was used. Once the decimal is rounded to the nearest whole number, it presents as linear even though the equations are not. These calculations were done for each gap width separately and the data was input into the table. (It is also important to note that these two methods of calculation did not differ by more than one unit of STC.) The equations derived are as follows:

- At 4.0-inch gap : $Y = 4.13 \times 10^{-3}X^2 + 0.33X + 23.41$
- At 4.5-inch gap : $Y = 3.58 \times 10^{-3}X^2 + 0.32X + 24.97$
- At 5.0-inch gap : $Y = 3.04 \times 10^{-3}X^2 + 0.32X + 26.53$
- At 5.5-inch gap : $Y = 3.04 \times 10^{-3}X^2 + 0.32X + 26.53$
- At 6.0-inch gap : $Y = 2.49 \times 10^{-3}X^2 + 0.31X + 28.09$
- At 6.5-inch gap : $Y = 2.49 \times 10^{-3}X^2 + 0.31X + 28.09$
- At 7.0-inch gap : $Y = 1.94 \times 10^{-3}X^2 + 0.31X + 29.65$

It is important to not that the equation derived was same for 5.0-inch and 5.5-inch gaps and the 6.0-inch and 6.5-inch gaps due to their respective inputs being identical. This is expected since data is rounded to the nearest whole number and the data distribution (range) is particularly tight in this testing.

At this point, we have solved for the following points (solutions from previous step shown in red):

Mullion Mate® Pro (Patent 12,024,881)					
		Baseline Wall STC			
		50	55	60	65
Mullion Mate® Pro - 4	4.0" Gap	50	54	58	62
	4.5" Gap	50	53	57	61
	5.0" Gap	50	53	57	60
Mullion Mate® Pro - 5.5	5.5" Gap	50	53	57	61
	6.0" Gap	50	53	56	59
	6.5" Gap	50	53	56	59
Mullion Mate® Pro - 7	7.0" Gap	50	53	55	58
	7.5" Gap				56
	8.0" Gap				54
	8.5" Gap				50

The next calculation uses the known data in the 60 STC column to solve for the missing values in that column using the polynomial:

$$Y = -0.22X^3 + 3.57X^2 – 19.59X + 93.3$$

This process of solving for the missing data points continues in the following order to solve for the last nine data points:

Solve for the 8.5-inch row: $Y = 1.11 \times 10^{-3}X^2 + 0..26X + 28.31$

Solve for the 50 STC column: $Y = -0.24X^3 + 4.06X^2 – 21.60X + 87.52$

Solve for the 7.5-inch row: $Y = -0.013X^2 + 2.07X – 22.0$

Solve for the 8.0-inch row: $Y = 0.0067X^2 -0.23X + 41.0$

After running these last four equations, we have completed the table (shown on page 25) with all of the composite STC results as they relate to the different base wall and gap-size conditions.

In a follow up addendum to this paper, we plan to run more tests that are designed to evaluate data points that were calculated using the methods described in this section. While we have run STC tests to validate interpolative calculations during the writing of this paper, we continue to make improvements and research different materials for future embodiments.

Based on the results of validation testing, we believe that a +/- 1 margin of error is applicable to the results posted herein. As the product continues to evolve, we will continue updating our performance results that are published on the website.

References/Bibliography

(1) **ASTM E90-09(2016)**, Standard Test Method for Laboratory Measurement of Airborne Sound Transmission Loss of Building Partitions and Elements, ASTM International, West Conshohocken, PA, 2016, www.astm.org

(2) **ASTM E413-16**, Classification for Rating Sound Insulation, ASTM International, West Conshohocken, PA.