

WinLok® MH Accessible Security Ceiling System

Secure. Anti-Ligature. Acoustical.

GORDON®
ARCHITECTURAL+ENGINEERED SOLUTIONS

WinLok® MH Accessible Security Ceiling System

Gordon's WinLok® MH Accessible Security Ceiling Systems are designed specifically for mental health facilities to meet the highest standards for patient care. WinLok® MH Ceilings are anti-ligature and impact tested to ensure a safe patient environment. These ceilings feature a concealed suspension system with snap-up panels that securely lock in place. Panels are maintenance friendly with 100% point-accessibility to the plenum with the use of special access tools. The unique design of WinLok® ensures the panels go back in exactly how they came out.

WinLok® MH Ceiling Panel Options:

- Standard Size: 30" x 30 "
- Custom Sizes: 12" - 56" width & up to 144" length
- Shapes: Square or Rectangular
- Perforated or Solid Panels
- .050" Aluminum
- NRC 0.80 and higher when integrated with Gordon's CMA Acoustical Pads
- Security Light, HVAC and Fire Sprinkler Integration

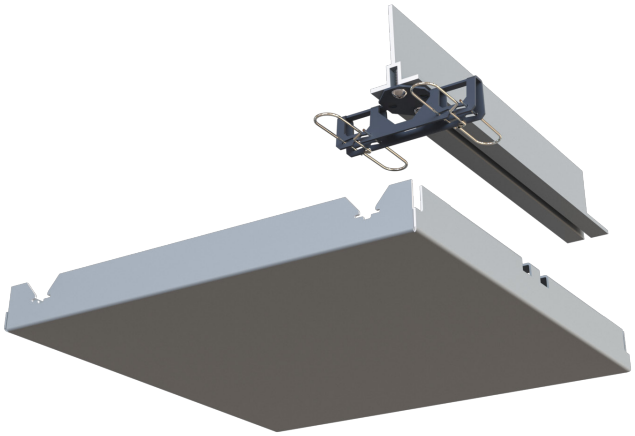

AAMA 2604 & AAMA 2605 Powder Coating Finishes:

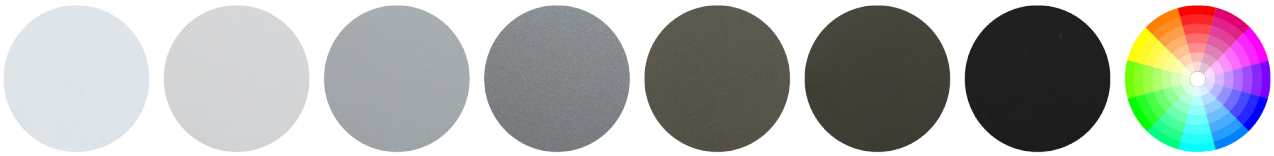

Wood-Look Finishes:



Perforations:

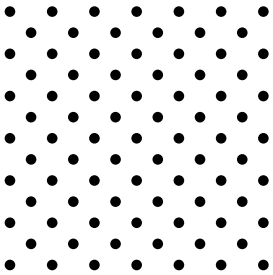

R564-732DG10
5/64" HOLES ON 7/32"
DIAGONAL CENTERS
10% OPEN AREA

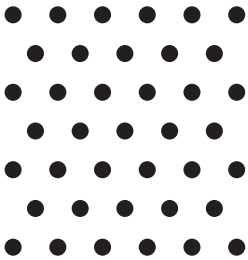

R18-2164SG13
ROUND 1/8" X 21/64"
STAGGERED CENTERS
13% OPEN AREA

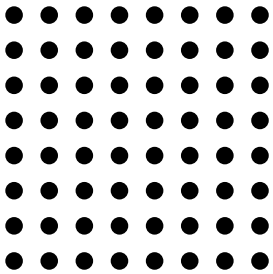

R18-14ST20
1/8" HOLES ON 1/4"
STRAIGHT CENTERS
20% OPEN AREA

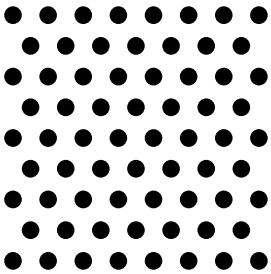

R18-14SG23
1/8" HOLES ON 1/4"
STAGGERED CENTERS
23% OPEN AREA

WinLok® MH Patent 10113317, 11168477, 12049758
WinLok® MH Accessible Security Ceilings have been selected for security, safety, acoustical performance and accessibility by the New York State Office of Mental Health for their Patient Safety Standards, Materials and Systems Guidelines.

GORDON®
ARCHITECTURAL+ENGINEERED SOLUTIONS
800.747.8954 | GORDON-INC.COM

5023 Hazel Jones Rd.
Bossier City, LA 71111
sales@gordon-inc.com