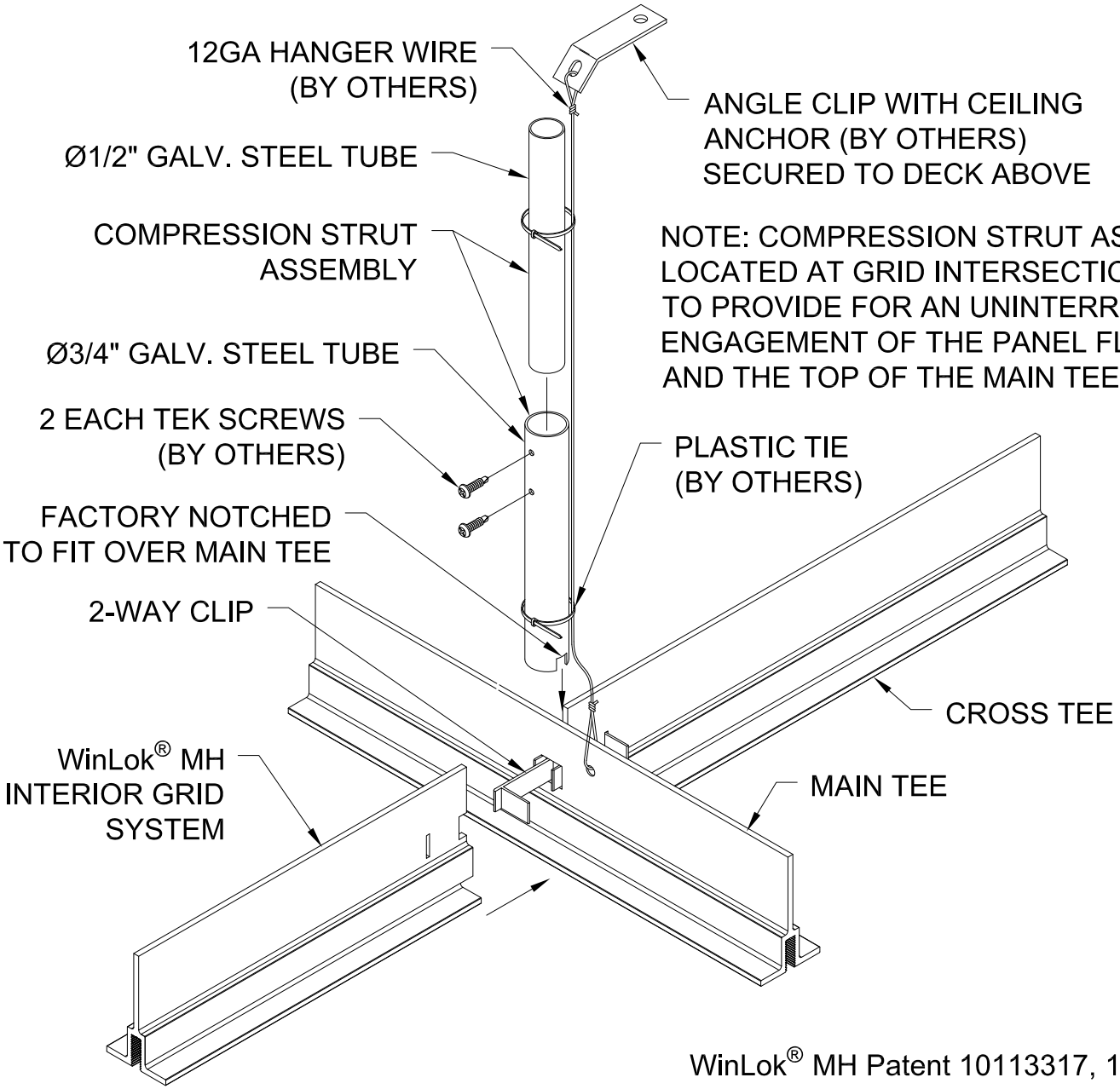

WinLok® MH Patent 10113317, 11168477, 12049758

GORDON®
ARCHITECTURAL+ENGINEERED SOLUTIONS
5023 Hazel Jones Rd.
Bossier City, LA 71111
800.747.8954
GORDON-INC.COM
sales@gordon-inc.com

MENTAL HEALTH CEILINGS
WinLok®MH
COMPRESSION STRUT GRID ASSEMBLY

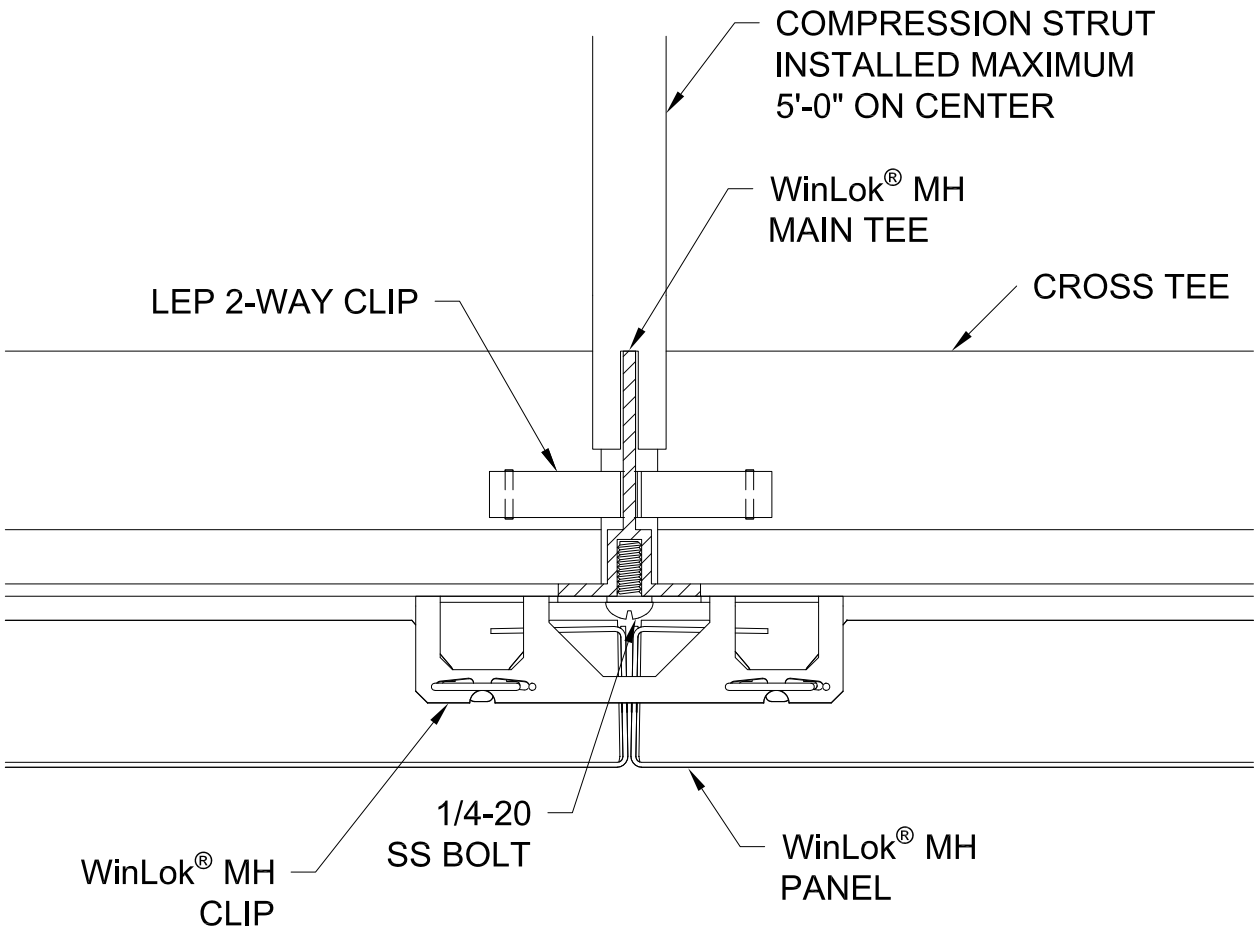

WinLok® MH Patent 10113317, 11168477, 12049758

GORDON®
ARCHITECTURAL+ENGINEERED SOLUTIONS
5023 Hazel Jones Rd.
Bossier City, LA 71111
800.747.8954
GORDON-INC.COM
sales@gordon-inc.com

MENTAL HEALTH CEILINGS
WinLok®MH
COMPRESSION STRUT PANEL JOINT SECTION

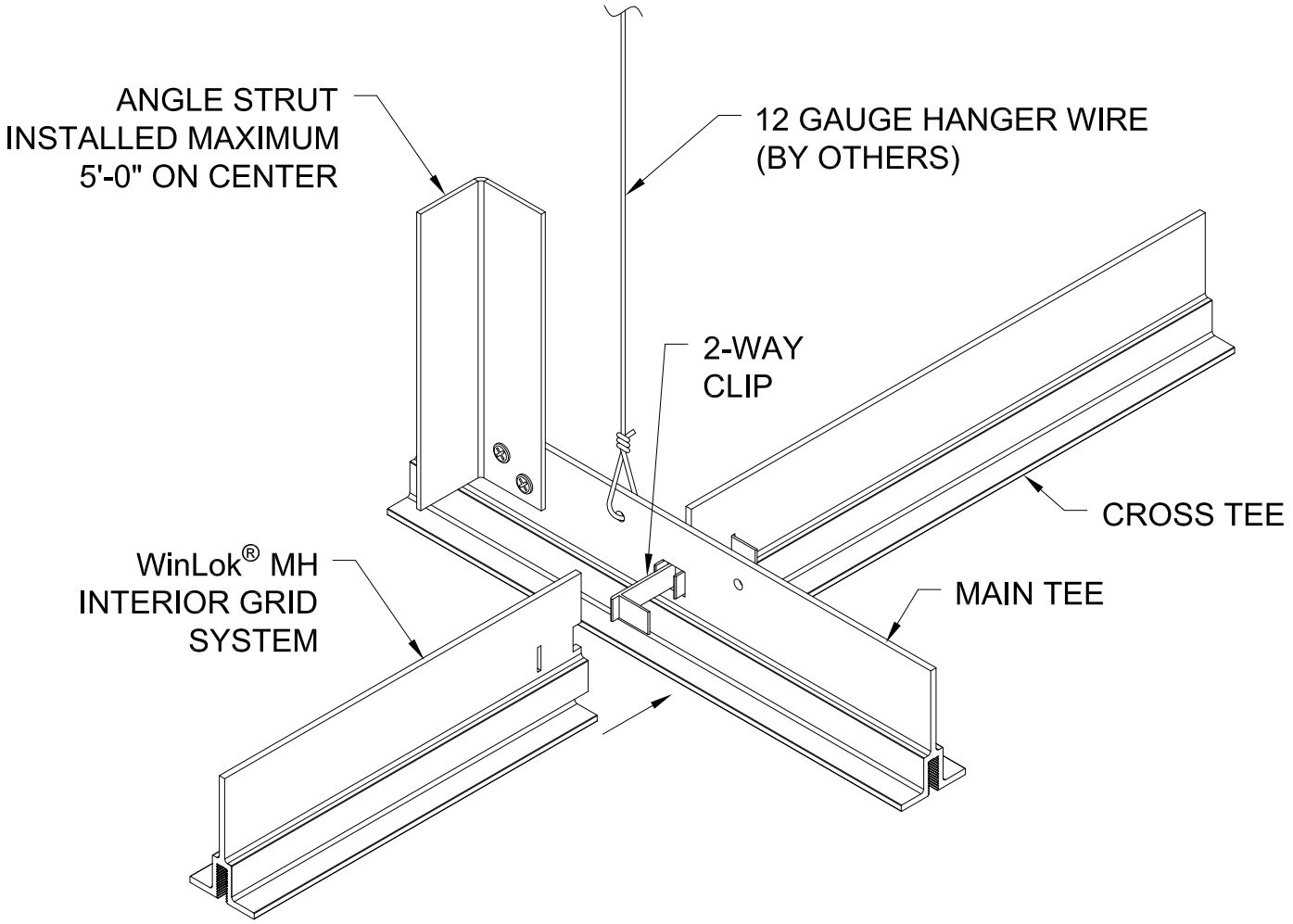

WinLok® MH Patent 10113317, 11168477, 12049758

GORDON®
ARCHITECTURAL+ENGINEERED SOLUTIONS
5023 Hazel Jones Rd.
Bossier City, LA 71111
800.747.8954
GORDON-INC.COM
sales@gordon-inc.com

MENTAL HEALTH CEILINGS
WinLok®MH
ANGLE STRUT GRID ASSEMBLY

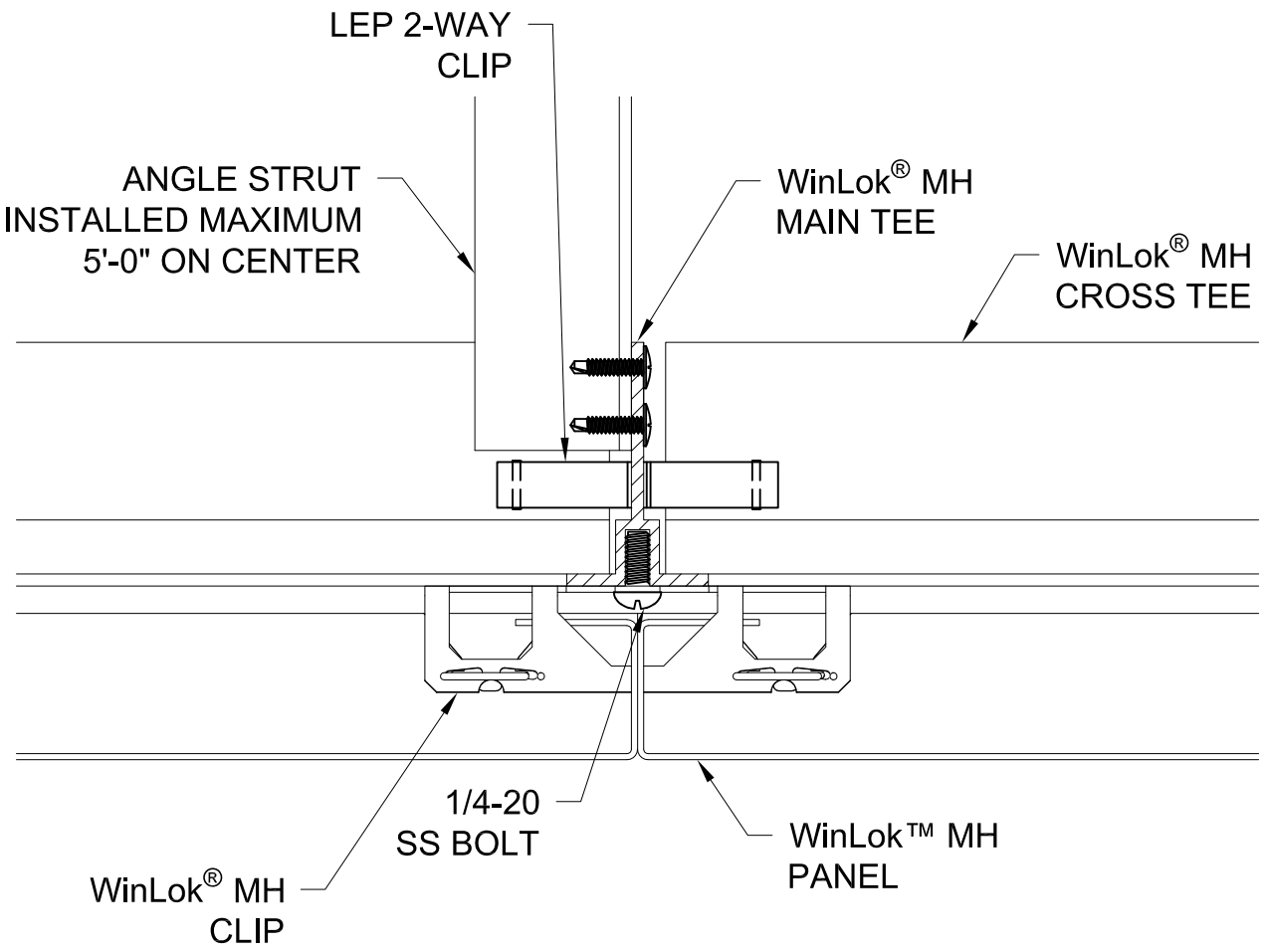

WinLok® MH Patent 10113317, 11168477, 12049758

GORDON®
ARCHITECTURAL+ENGINEERED SOLUTIONS
5023 Hazel Jones Rd.
Bossier City, LA 71111
800.747.8954
GORDON-INC.COM
sales@gordon-inc.com

MENTAL HEALTH CEILINGS
WinLok®MH
ANGLE STRUT PANEL JOINT SECTION

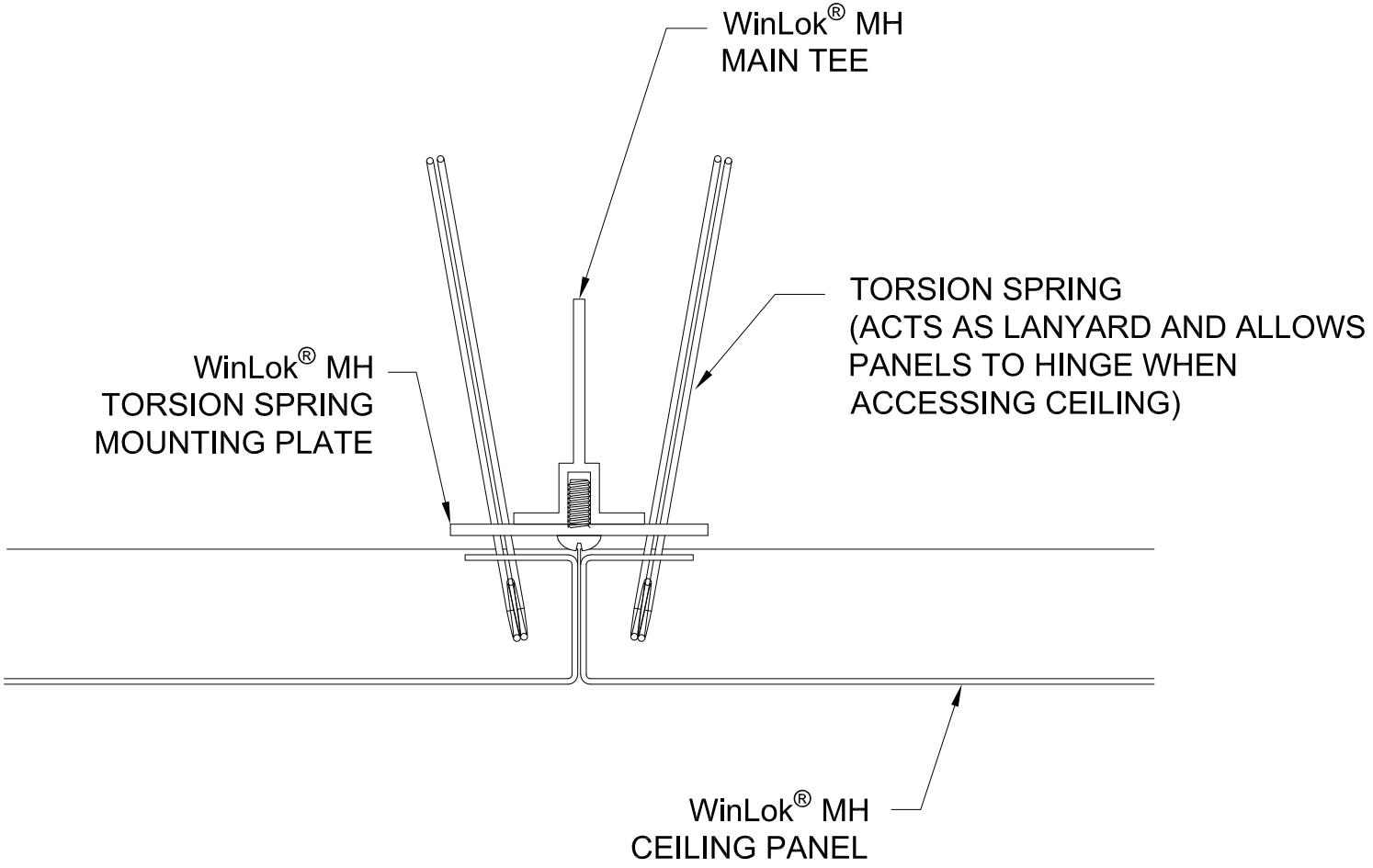

WinLok® MH Patent 10113317, 11168477, 12049758

GORDON®
ARCHITECTURAL+ENGINEERED SOLUTIONS
5023 Hazel Jones Rd.
Bossier City, LA 71111
800.747.8954
GORDON-INC.COM
sales@gordon-inc.com

MENTAL HEALTH CEILINGS
WinLok®MH
TORSION PLATE SECTION

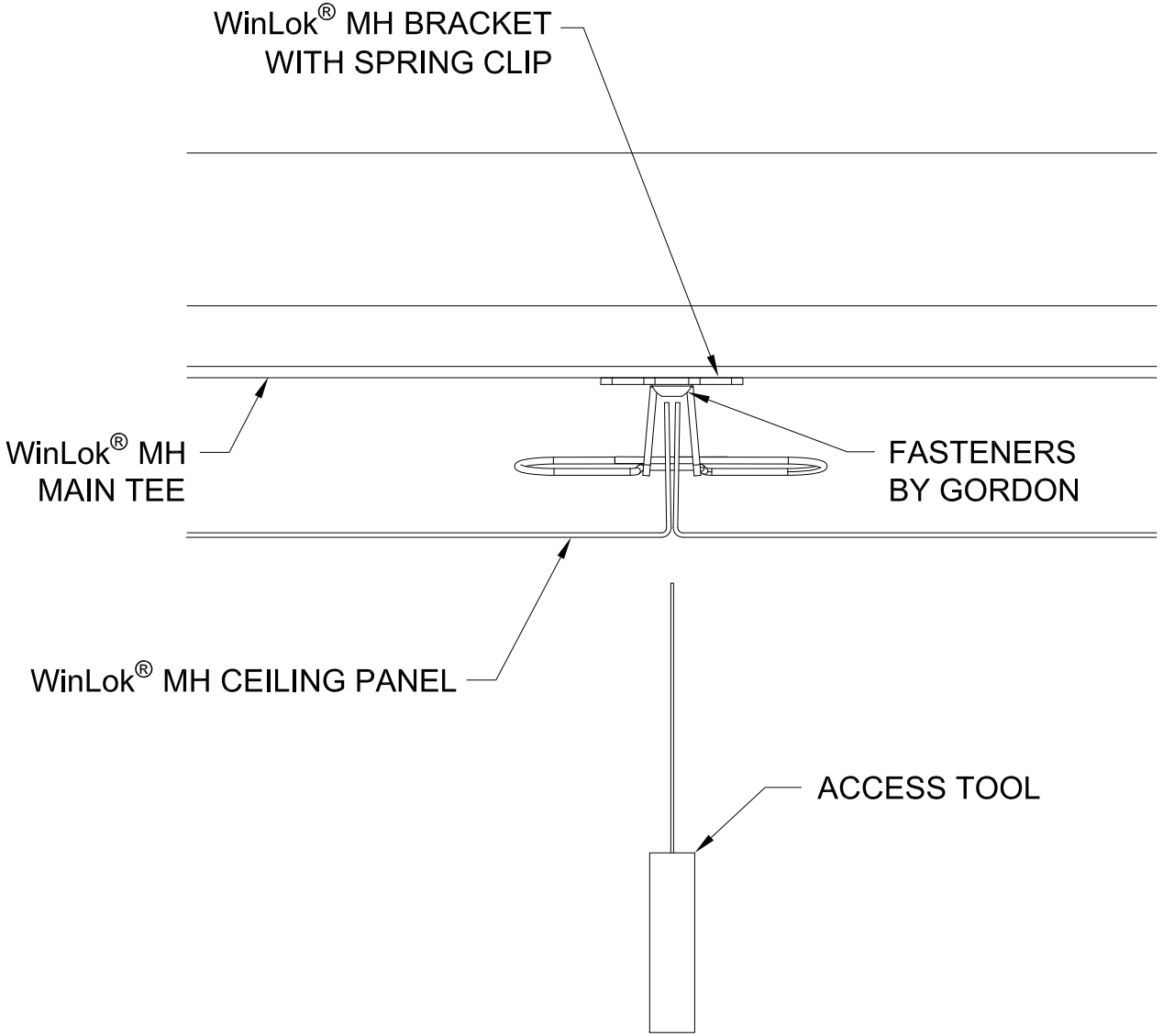

WinLok® MH Patent 10113317, 11168477, 12049758

GORDON®
ARCHITECTURAL+ENGINEERED SOLUTIONS
5023 Hazel Jones Rd.
Bossier City, LA 71111
800.747.8954
GORDON-INC.COM
sales@gordon-inc.com

MENTAL HEALTH CEILINGS
WinLok®MH
ACCESS TOOL SECTION

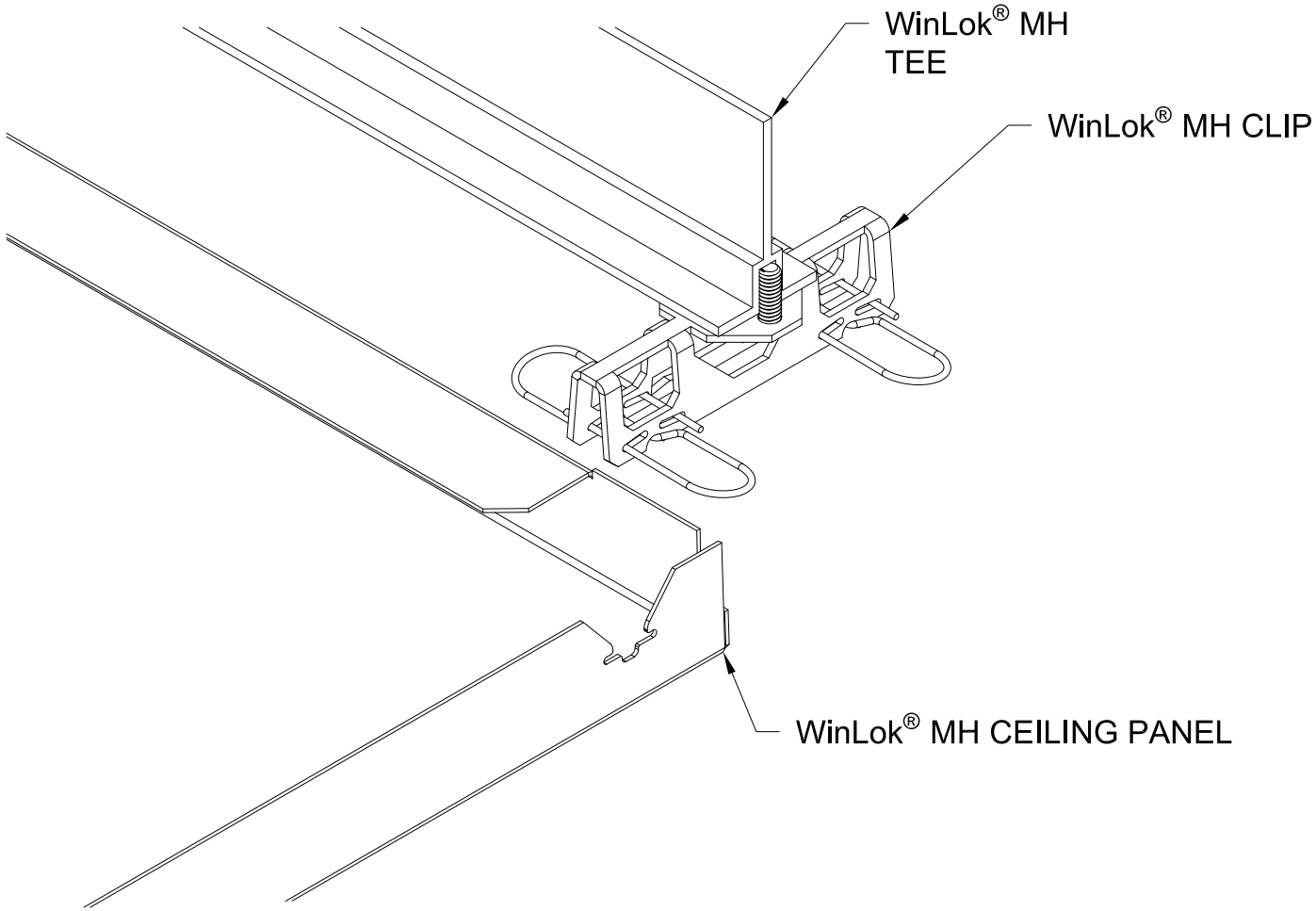

WinLok® MH Patent 10113317, 11168477, 12049758

GORDON®
ARCHITECTURAL+ENGINEERED SOLUTIONS
5023 Hazel Jones Rd.
Bossier City, LA 71111
800.747.8954
GORDON-INC.COM
sales@gordon-inc.com

MENTAL HEALTH CEILINGS
WinLok®MH
PANEL INSTALLATION

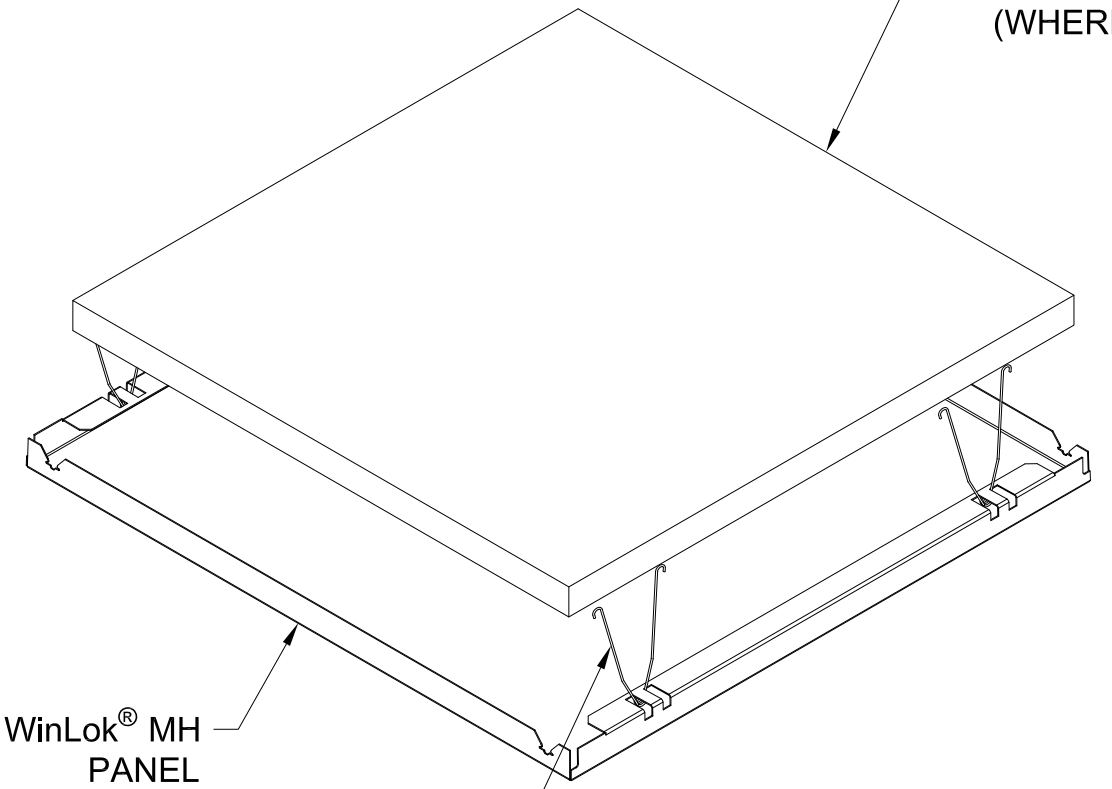

WinLok® MH Patent 10113317, 11168477, 12049758

GORDON®
ARCHITECTURAL+ENGINEERED SOLUTIONS
5023 Hazel Jones Rd.
Bossier City, LA 71111
800.747.8954
GORDON-INC.COM
sales@gordon-inc.com

MENTAL HEALTH CEILINGS
WinLok®MH
PANEL ASSEMBLY DETAILS

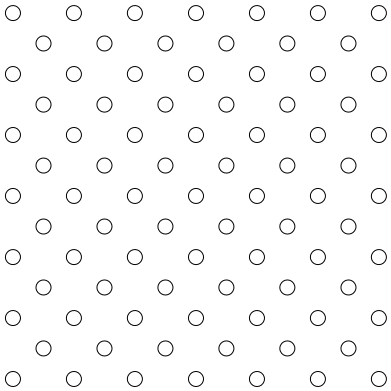

R564-732DG10
5/64" HOLES ON 7/32"
DIAGONAL CENTERS
10% OPEN AREA

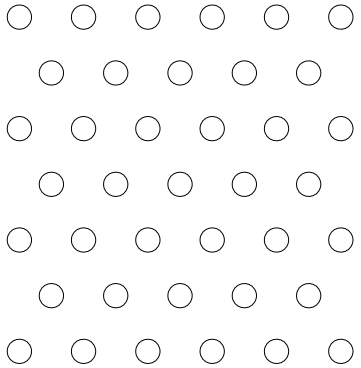

R18-216SG13
1/8" HOLES ON 21/64"
STAGGERED CENTERS
13% OPEN AREA

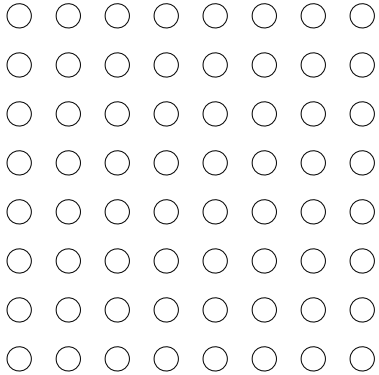

R18-14ST20
1/8" HOLES ON 1/4"
STRAIGHT CENTERS
20% OPEN AREA

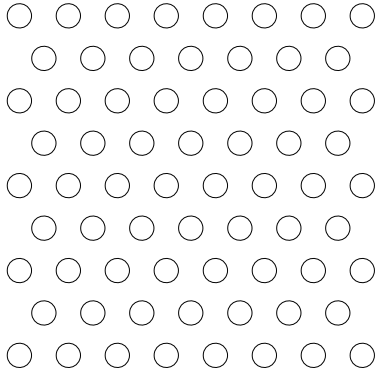

R18-14SG23
1/8" HOLES ON 1/4"
STAGGERED CENTERS
23% OPEN AREA

GORDON®
ARCHITECTURAL+ENGINEERED SOLUTIONS
5023 Hazel Jones Rd.
Bossier City, LA 71111
800.747.8954
GORDON-INC.COM
sales@gordon-inc.com

MENTAL HEALTH CEILINGS
WinLok®MH
PERFORATION OPTIONS

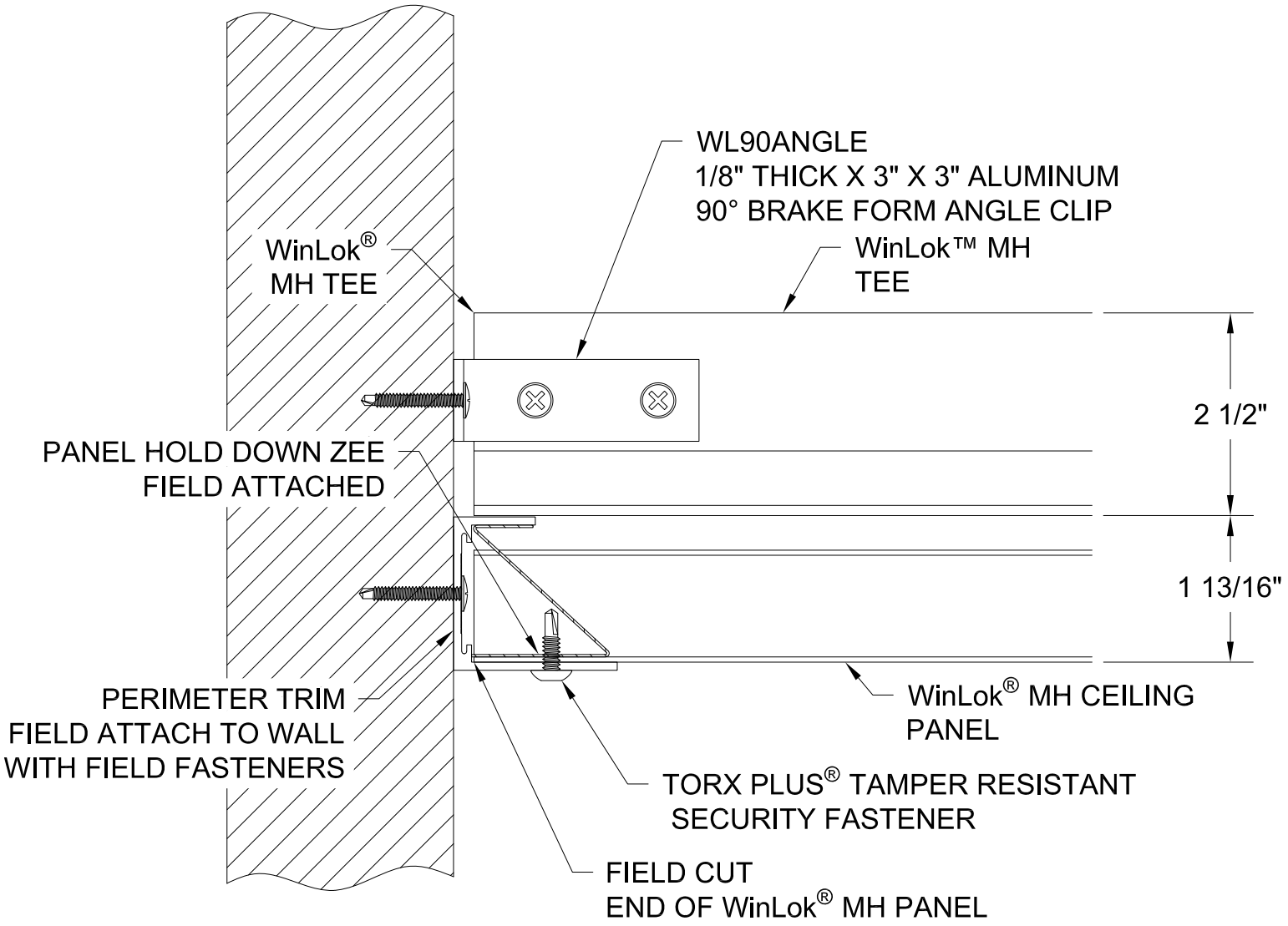

TORX PLUS® IS A REGISTERED TRADEMARK OF
ACUMENT INTELLECTUAL PROPERTIES, LLC

WinLok® MH Patent 10113317, 11168477, 12049758

GORDON®
ARCHITECTURAL+ENGINEERED SOLUTIONS
5023 Hazel Jones Rd.
Bossier City, LA 71111
800.747.8954
GORDON-INC.COM
sales@gordon-inc.com

MENTAL HEALTH CEILINGS
WinLok®MH
FIXED PERIMETER SECTION

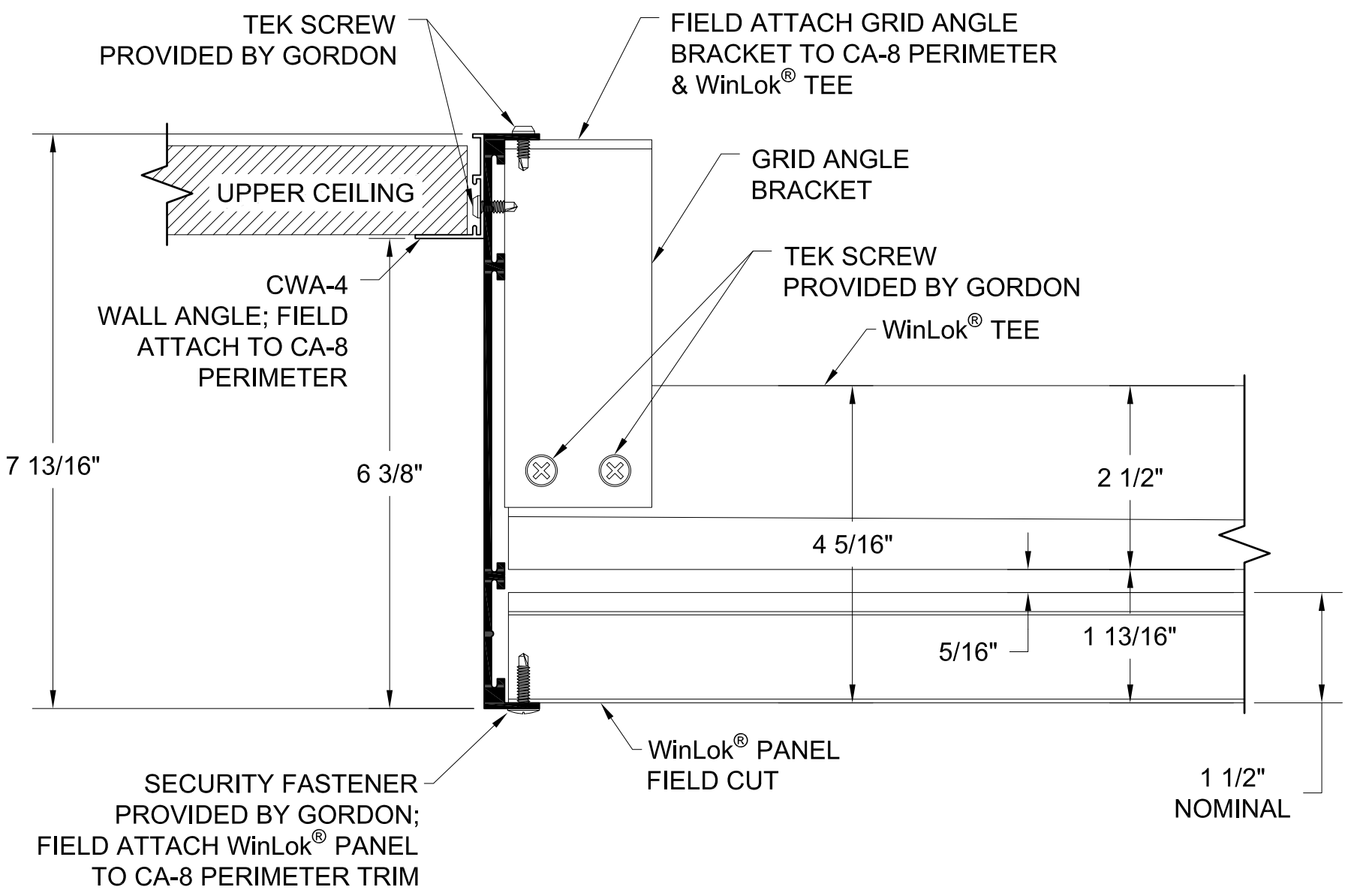

GORDON®
ARCHITECTURAL+ENGINEERED SOLUTIONS
5023 Hazel Jones Rd.
Bossier City, LA 71111
800.747.8954
GORDON-INC.COM
sales@gordon-inc.com

MENTAL HEALTH CEILINGS
WinLok®MH
TRANSITION AT PERIMETER

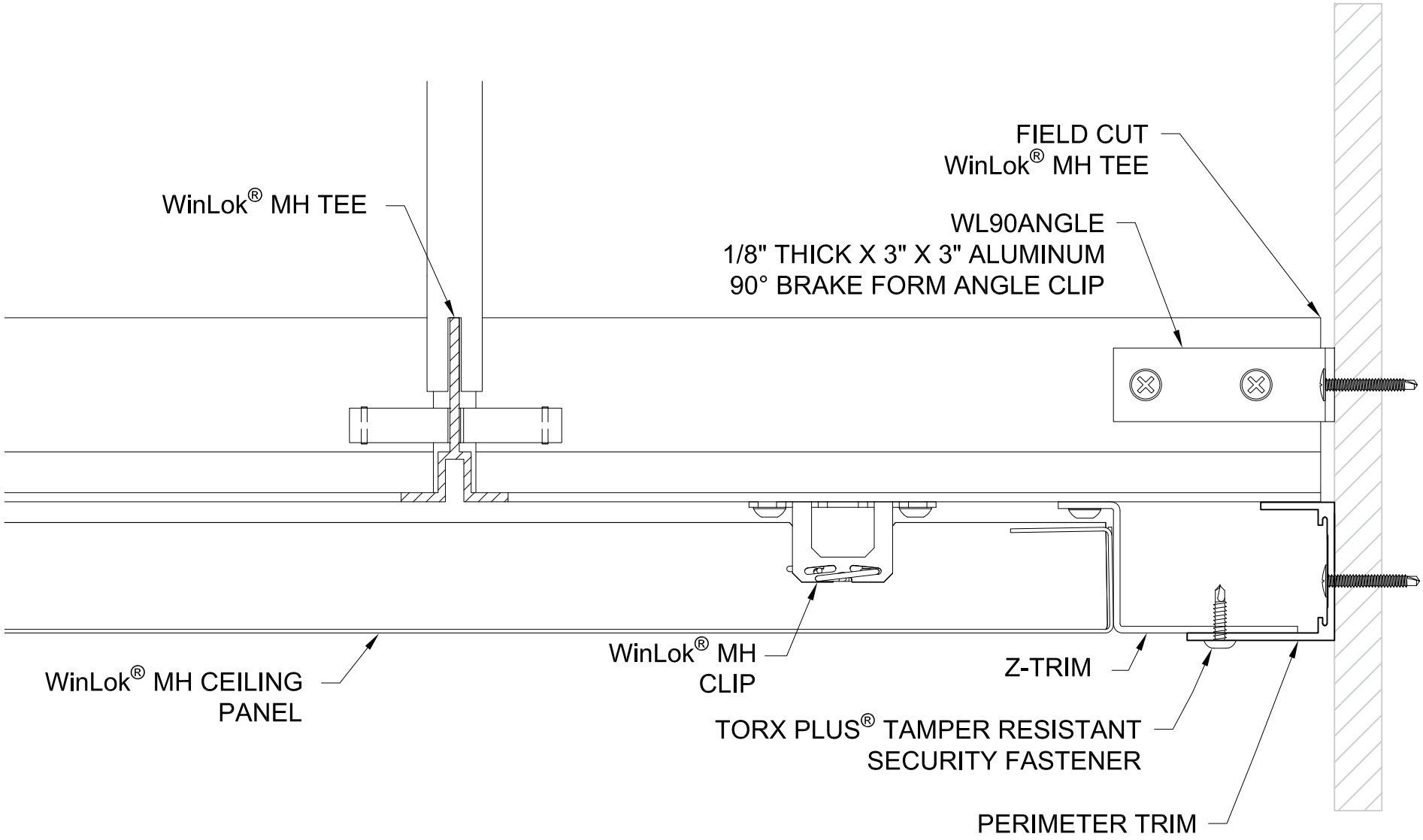

TORX PLUS® IS A REGISTERED TRADEMARK OF
ACUMENT INTELLECTUAL PROPERTIES, LLC

WinLok® MH Patent 10113317, 11168477, 12049758

GORDON®
ARCHITECTURAL+ENGINEERED SOLUTIONS
5023 Hazel Jones Rd.
Bossier City, LA 71111
800.747.8954
GORDON-INC.COM
sales@gordon-inc.com

MENTAL HEALTH CEILINGS
WinLok®MH
FLOATING PERIMETER SECTION

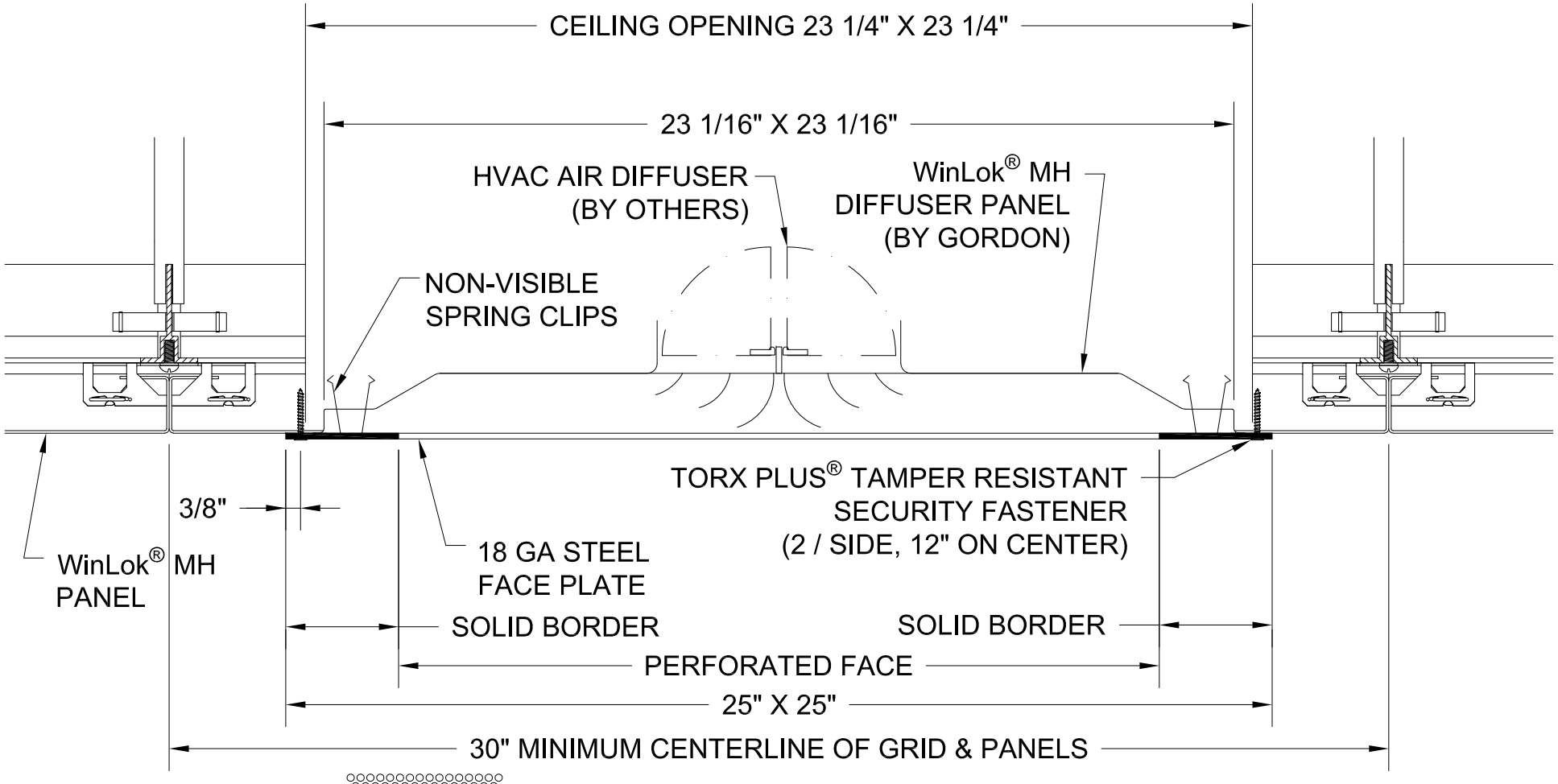

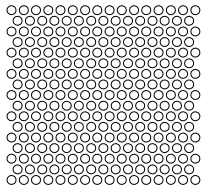

DIFFUSER PANEL PERFORATION PATTERN
3/16" HOLES ON 1/4" STAGGERED CENTERS
50% OPEN AREA

TORX PLUS® IS A REGISTERED TRADEMARK OF ACUMENT INTELLECTUAL PROPERTIES, LLC

WinLok® MH Patent 10113317, 11168477, 12049758

GORDON®
ARCHITECTURAL+ENGINEERED SOLUTIONS
5023 Hazel Jones Rd.
Bossier City, LA 71111
800.747.8954
GORDON-INC.COM
sales@gordon-inc.com

MENTAL HEALTH CEILINGS
WinLok®MH
HVAC DIFFUSER SECTION

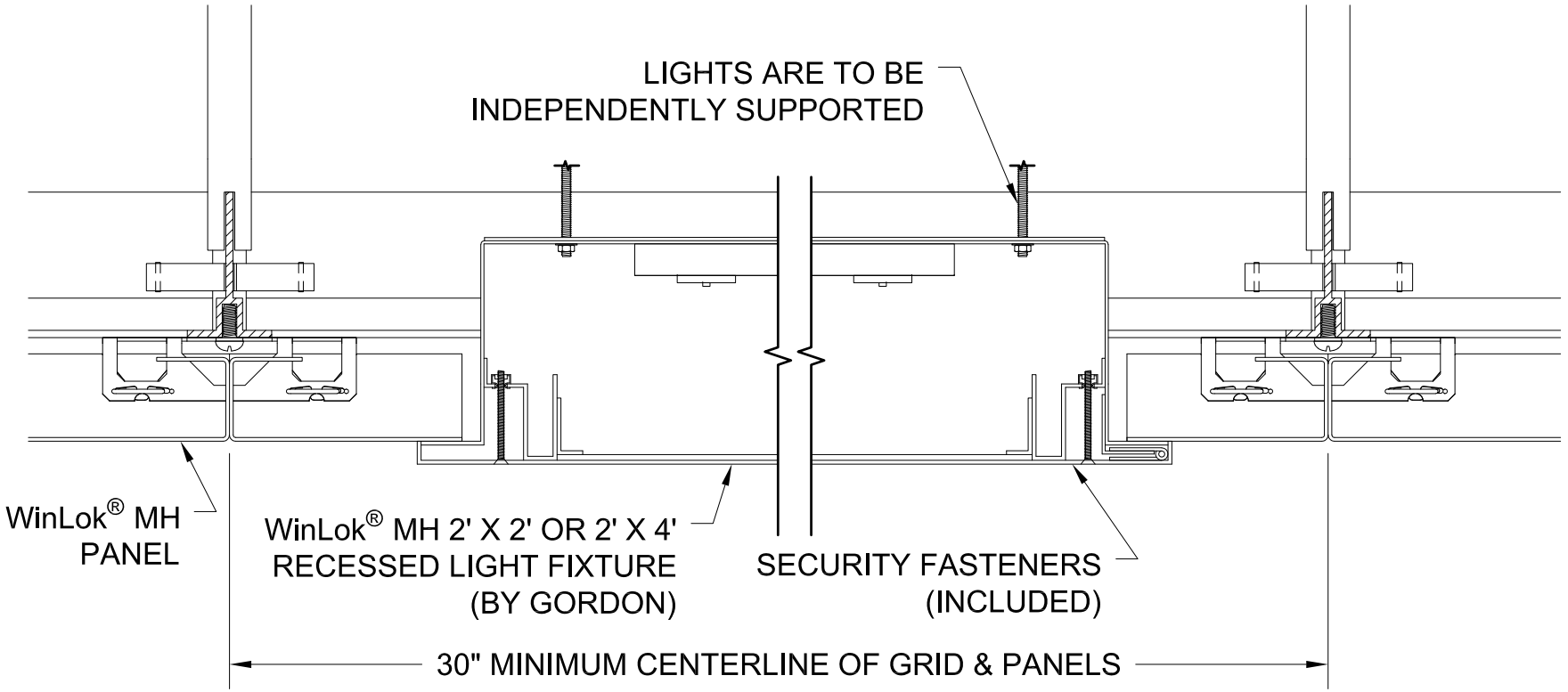

WinLok® MH Patent 10113317, 11168477, 12049758

GORDON®
ARCHITECTURAL+ENGINEERED SOLUTIONS
5023 Hazel Jones Rd.
Bossier City, LA 71111
800.747.8954
GORDON-INC.COM
sales@gordon-inc.com

MENTAL HEALTH CEILINGS
WinLok®MH
RECESSED LIGHT SECTION

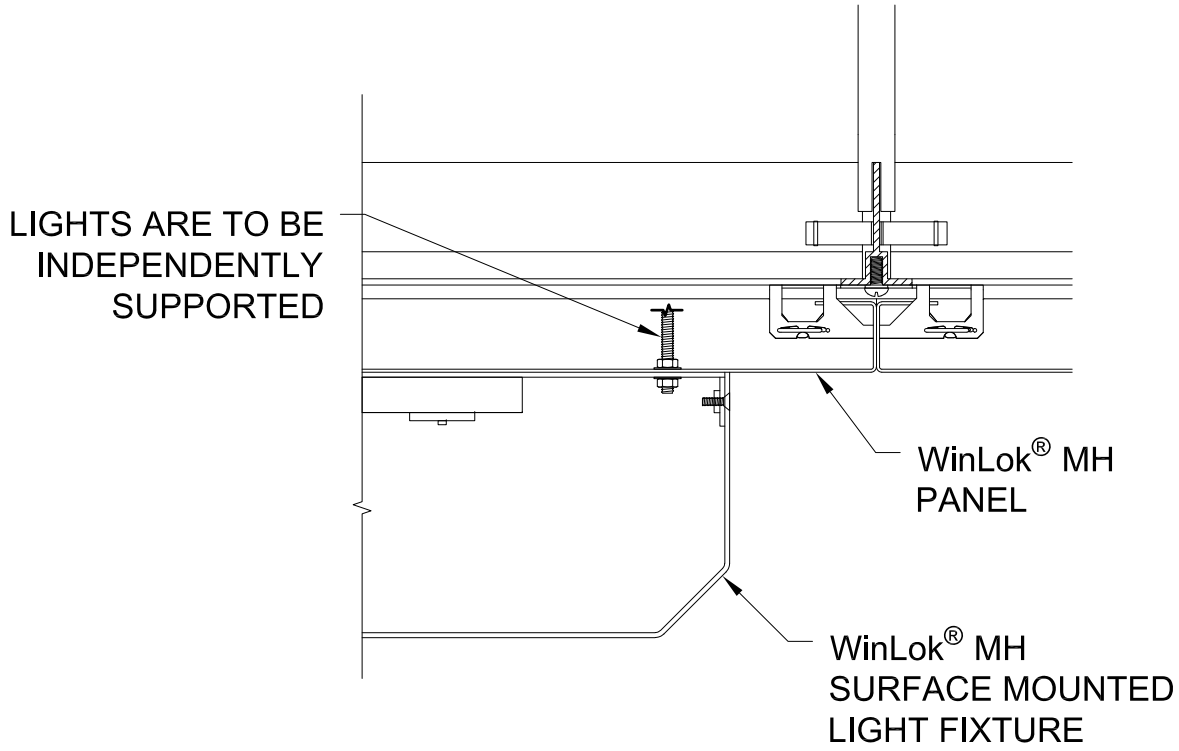

WinLok® MH Patent 10113317, 11168477, 12049758

GORDON®
ARCHITECTURAL+ENGINEERED SOLUTIONS
5023 Hazel Jones Rd.
Bossier City, LA 71111
800.747.8954
GORDON-INC.COM
sales@gordon-inc.com

MENTAL HEALTH CEILINGS
WinLok®MH
SURFACE LIGHT SECTION