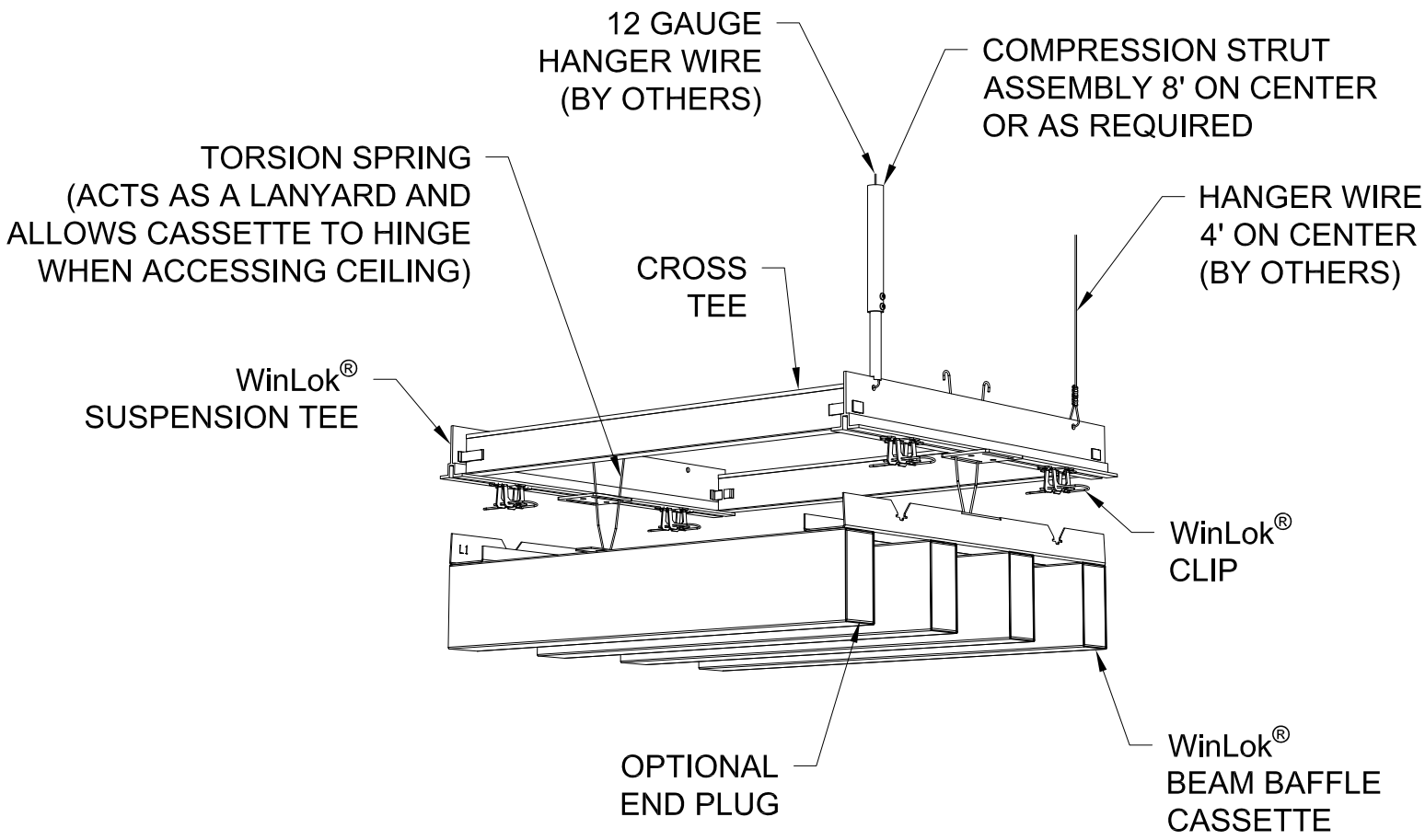

U.S. Patent No. 10113317, 11168477, 12049758

GORDON®
ARCHITECTURAL+ENGINEERED SOLUTIONS
5023 Hazel Jones Rd.
Bossier City, LA 71111
800.747.8954
GORDON-INC.COM
sales@gordon-inc.com

CEILINGS
WINLOK®BEAM BAFFLE CASSETTE
ISOMETRIC ASSEMBLY

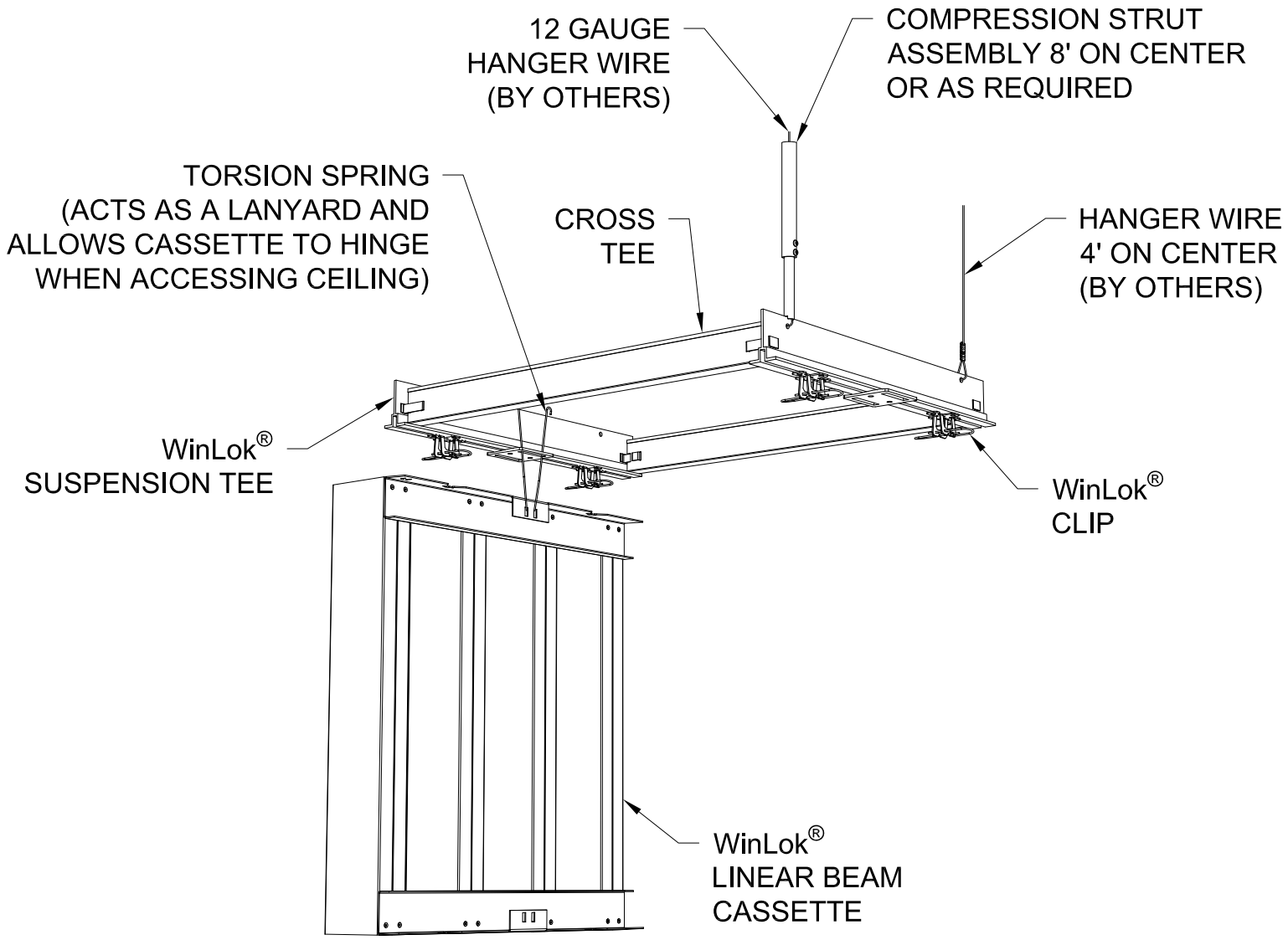

U.S. Patent No. 10113317, 11168477, 12049758

GORDON®
ARCHITECTURAL+ENGINEERED SOLUTIONS
5023 Hazel Jones Rd.
Bossier City, LA 71111
800.747.8954
GORDON-INC.COM
sales@gordon-inc.com

CEILINGS
WINLOK®BEAM BAFFLE CASSETTE
ISOMETRIC ASSEMBLY - HINGED

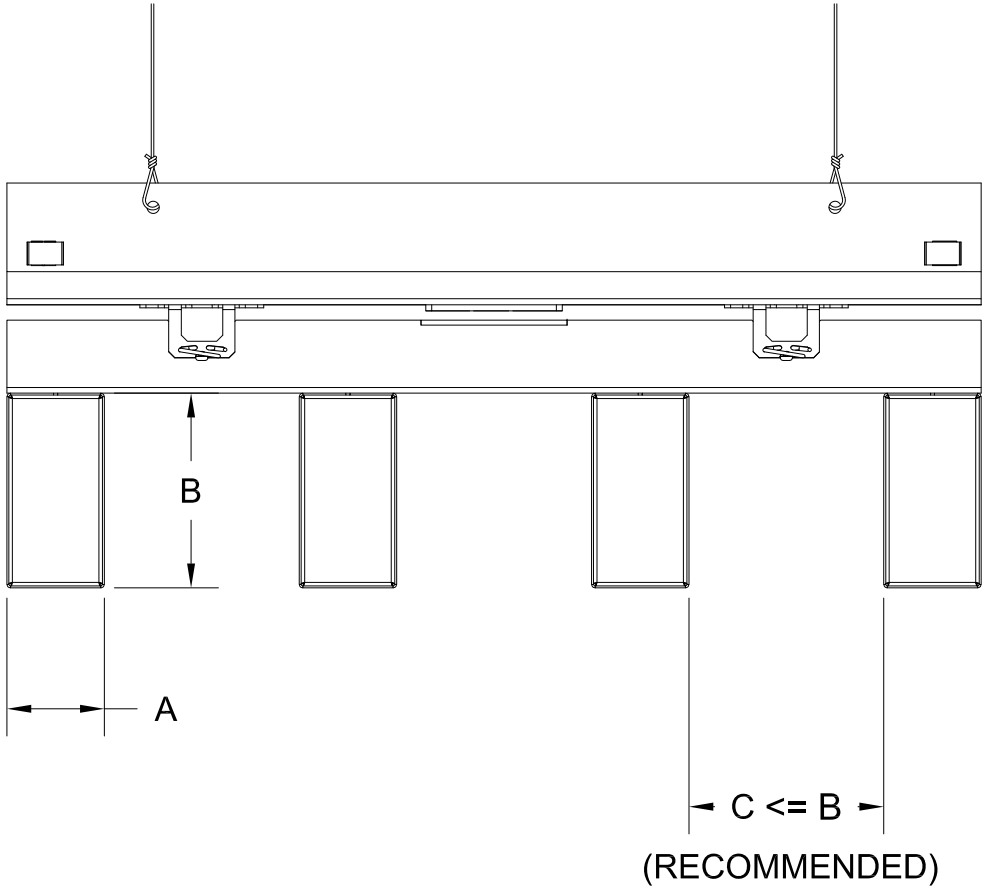

DIMENSIONS	
A	B
1"	4" - 5"
1 1/2"	4" - 20"
2"	4" - 20"
2 1/2"	4" - 20"
3"	4" - 20"
3 1/2"	4" - 20"
4"	4" - 20"
5"	4" - 5"
6"	4" - 5"
7"	4" - 5"
8"	4" - 5"
9"	4" - 5"
10"	4" - 5"
11"	4" - 5"
12"	4" - 5"

U.S. Patent No. 10113317, 11168477, 12049758

GORDON®
ARCHITECTURAL+ENGINEERED SOLUTIONS
5023 Hazel Jones Rd.
Bossier City, LA 71111
800.747.8954
GORDON-INC.COM
sales@gordon-inc.com

CEILINGS
WINLOK®BEAM BAFFLE CASSETTE
SIZE AND SPACING DETAIL

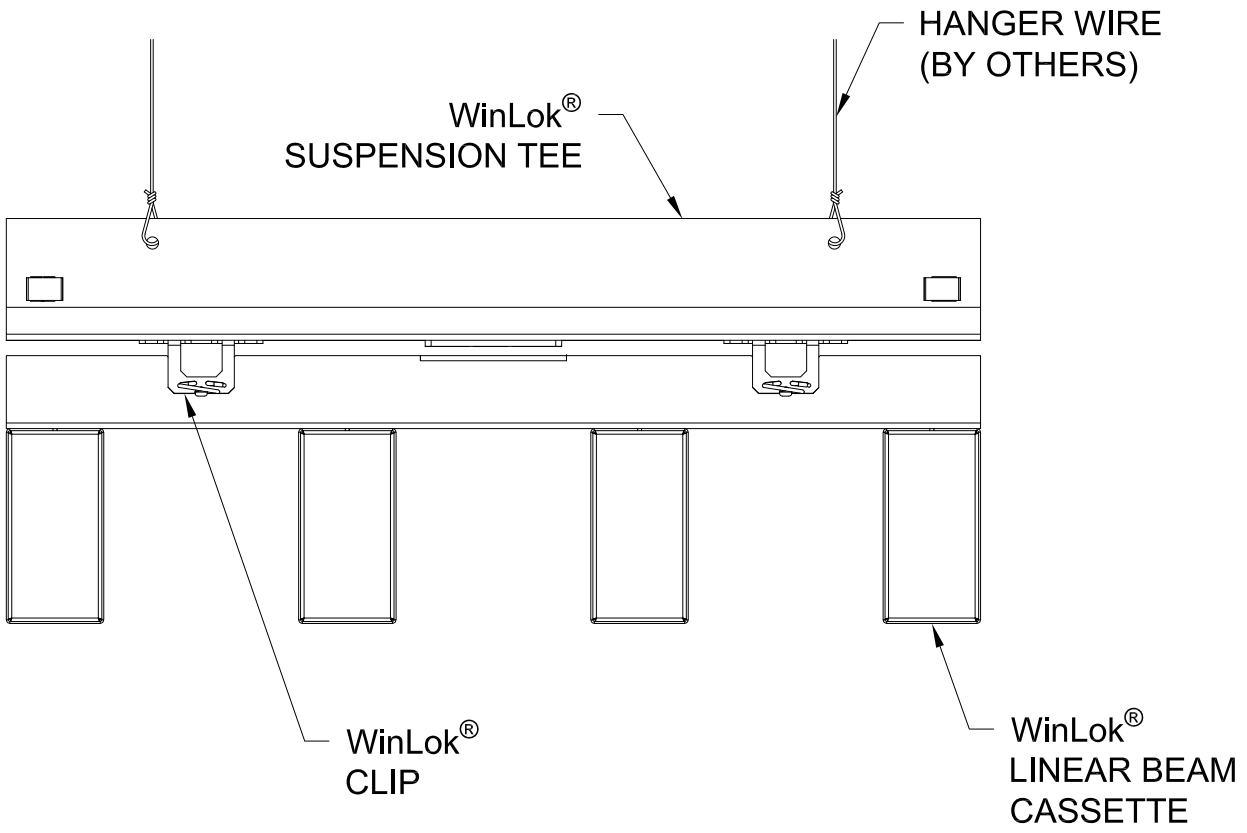

U.S. Patent No. 10113317 , 11168477, 12049758

GORDON®
ARCHITECTURAL+ENGINEERED SOLUTIONS
5023 Hazel Jones Rd.
Bossier City, LA 71111
800.747.8954
GORDON-INC.COM
sales@gordon-inc.com

CEILINGS
WINLOK®BEAM BAFFLE CASSETTE
CLIP DETAIL

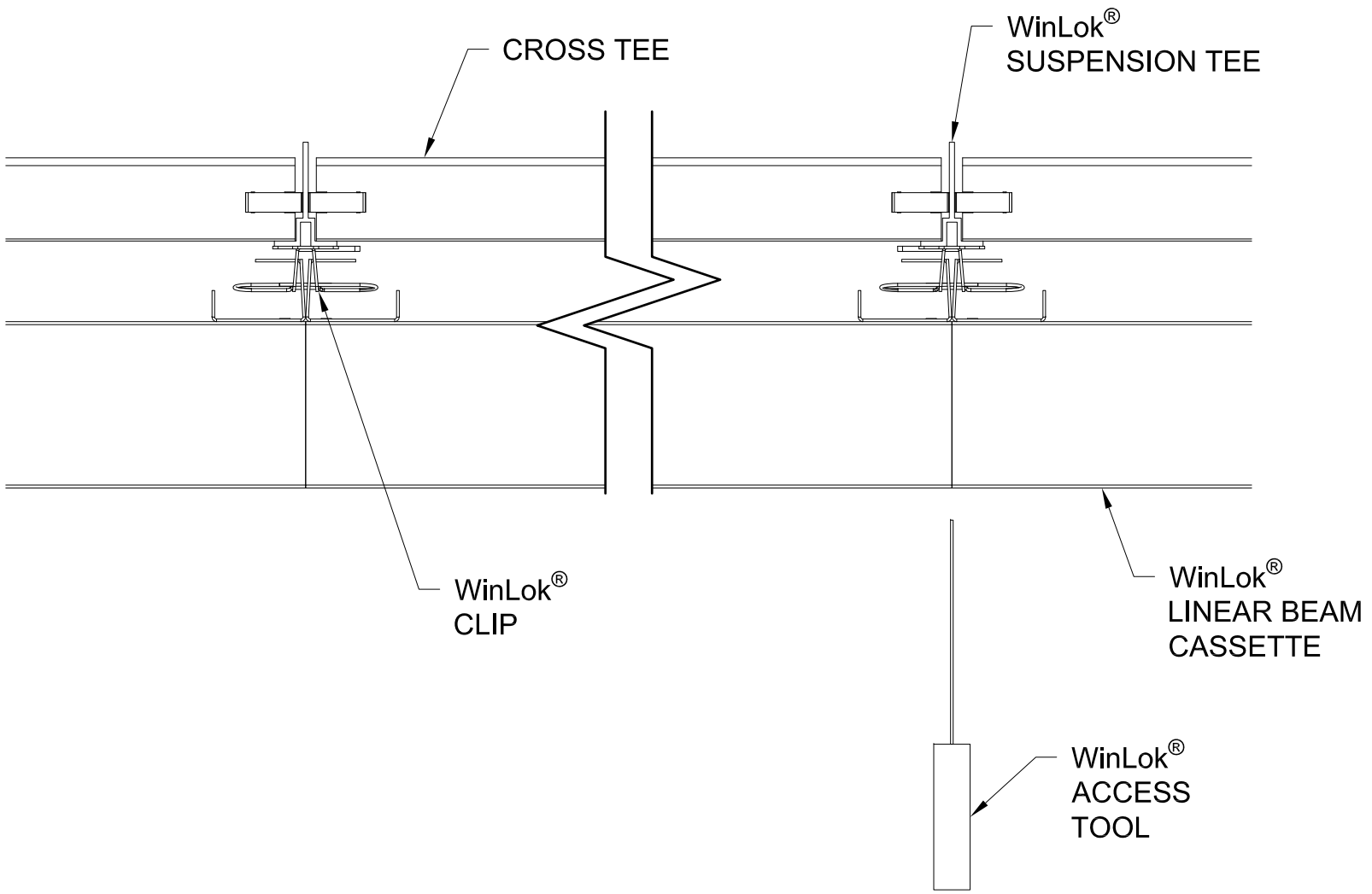

U.S. Patent No. 10113317 , 11168477, 12049758

GORDON®
ARCHITECTURAL+ENGINEERED SOLUTIONS
5023 Hazel Jones Rd.
Bossier City, LA 71111
800.747.8954
GORDON-INC.COM
sales@gordon-inc.com

CEILINGS
WINLOK®BEAM BAFFLE CASSETTE
ACCESS TOOL DETAIL

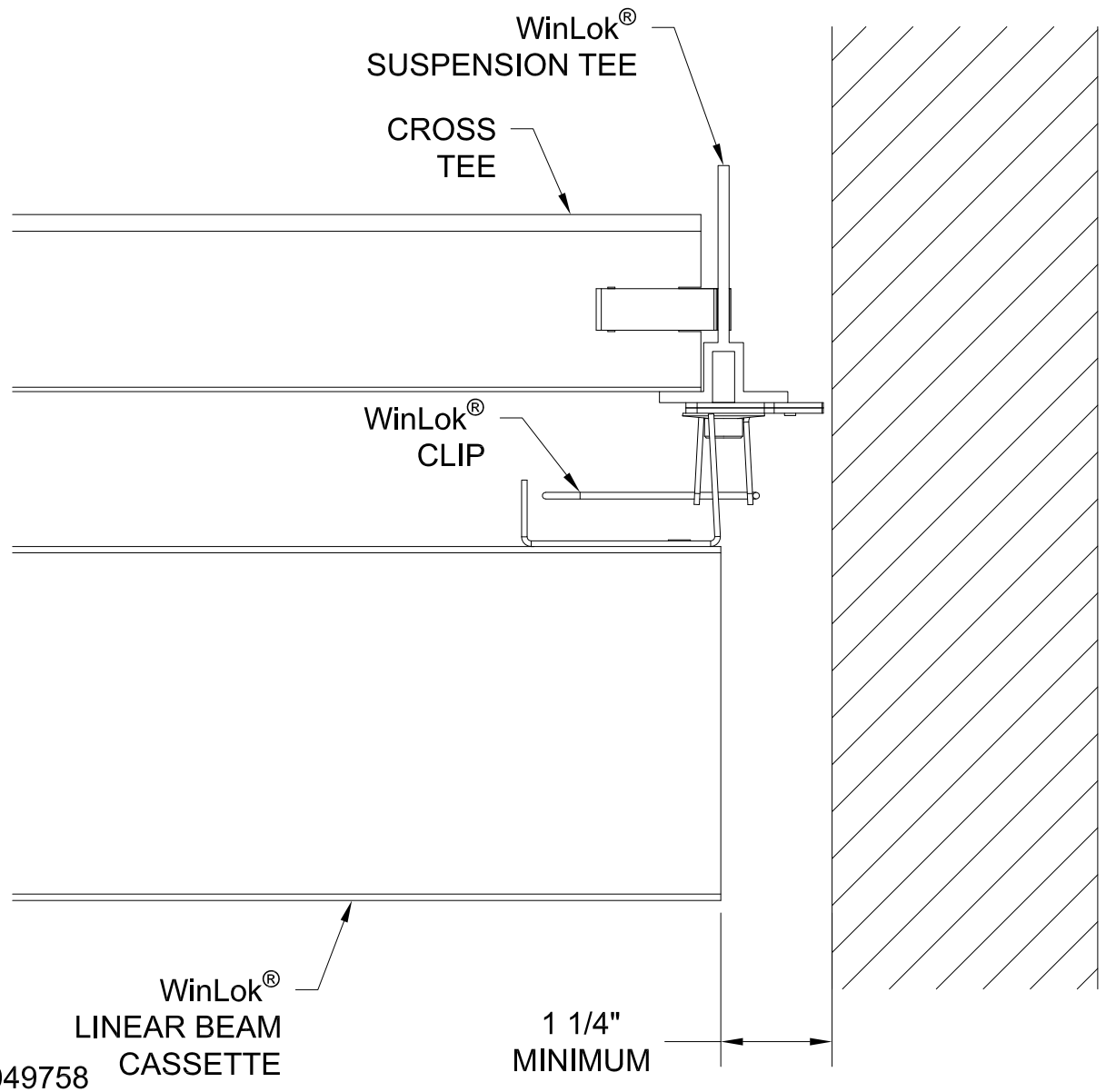

U.S. Patent No. 10113317 , 11168477, 12049758

GORDON®
ARCHITECTURAL+ENGINEERED SOLUTIONS
5023 Hazel Jones Rd.
Bossier City, LA 71111
800.747.8954
GORDON-INC.COM
sales@gordon-inc.com

CEILINGS
WINLOK®BEAM BAFFLE CASSETTE
PERIMETER DETAIL