NOTE: MULLION MATE® PLUS MAY BE SPLICED TOGETHER WHEN GREATER THAN 192" IS REQUIRED.

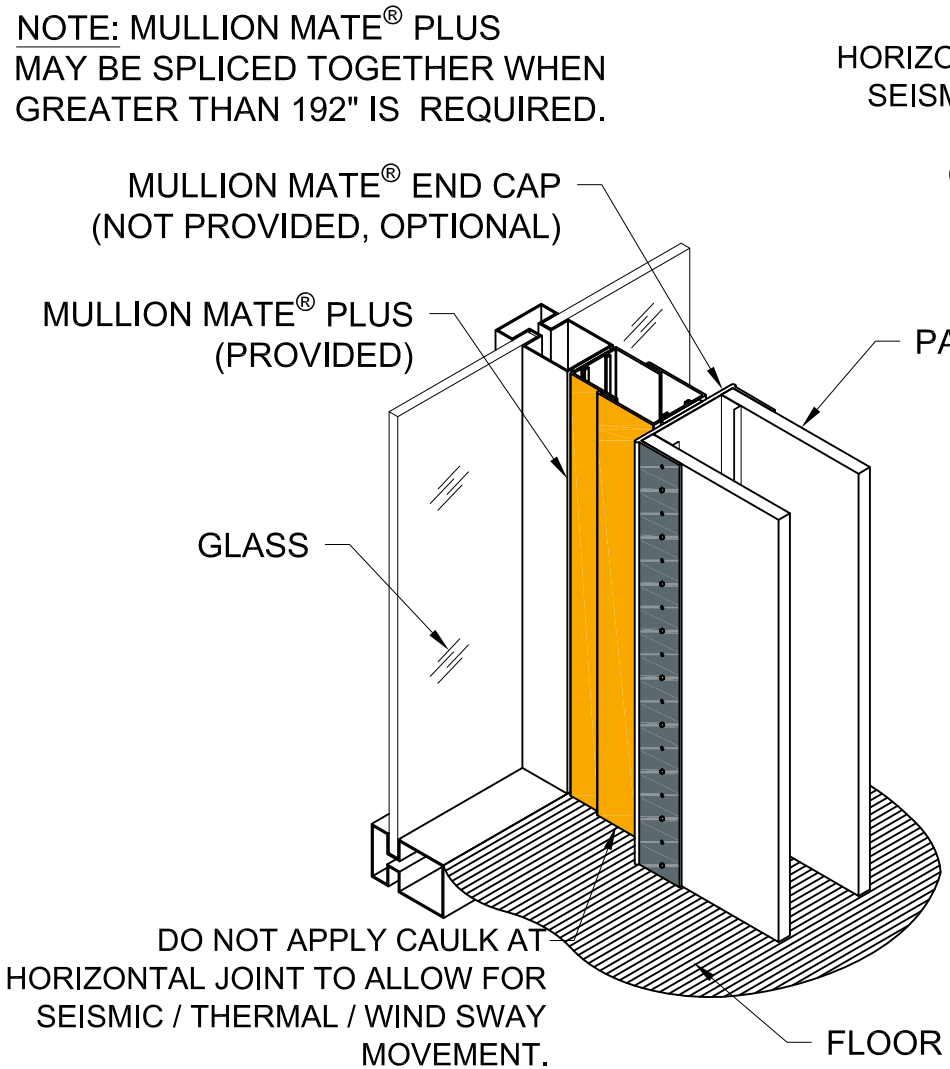

NOTE: EACH KIT INCLUDES, GASKET AND ACOUSTICAL CAULK.
ACOUSTICAL CAULK IS PROVIDED AS AN OPTIONAL ACCESSORY AND IS SUPPLIED IN A CLEAR, PAINTABLE FINISH.
END CAPS ARE OPTIONAL ACCESSORIES.

DETAIL AT FLOOR

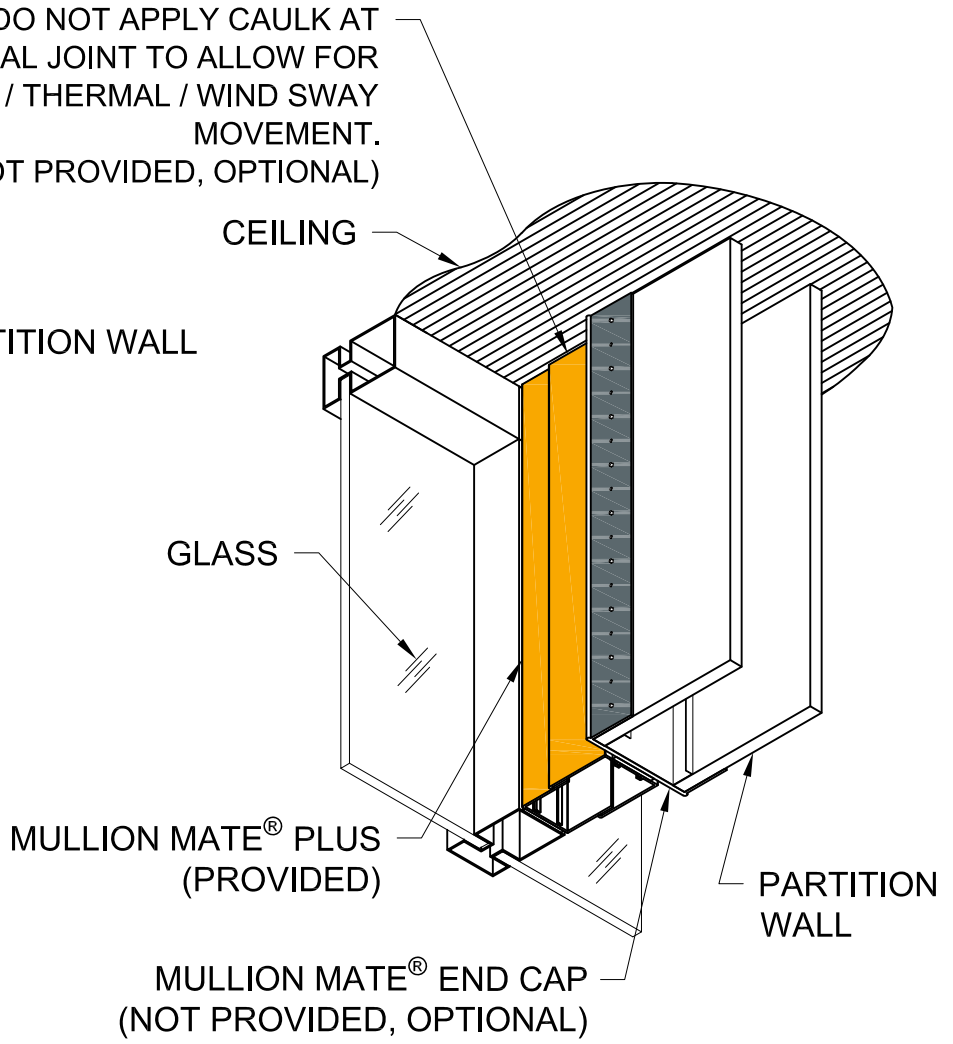

DETAIL AT CEILING

U.S. Patent No. 12,442,181

GORDON®
ARCHITECTURAL+ENGINEERED SOLUTIONS
5023 Hazel Jones Rd.
Bossier City, LA 71111
800.747.8954
GORDON-INC.COM
sales@gordon-inc.com

PARTITION GAP CLOSURES
MULLION MATE PLUS
WALL-TO-MULLION ISO VIEW

NOTE: MULLION MATE® PLUS MAY BE SPLICED TOGETHER WHEN GREATER THAN 192" IS REQUIRED.

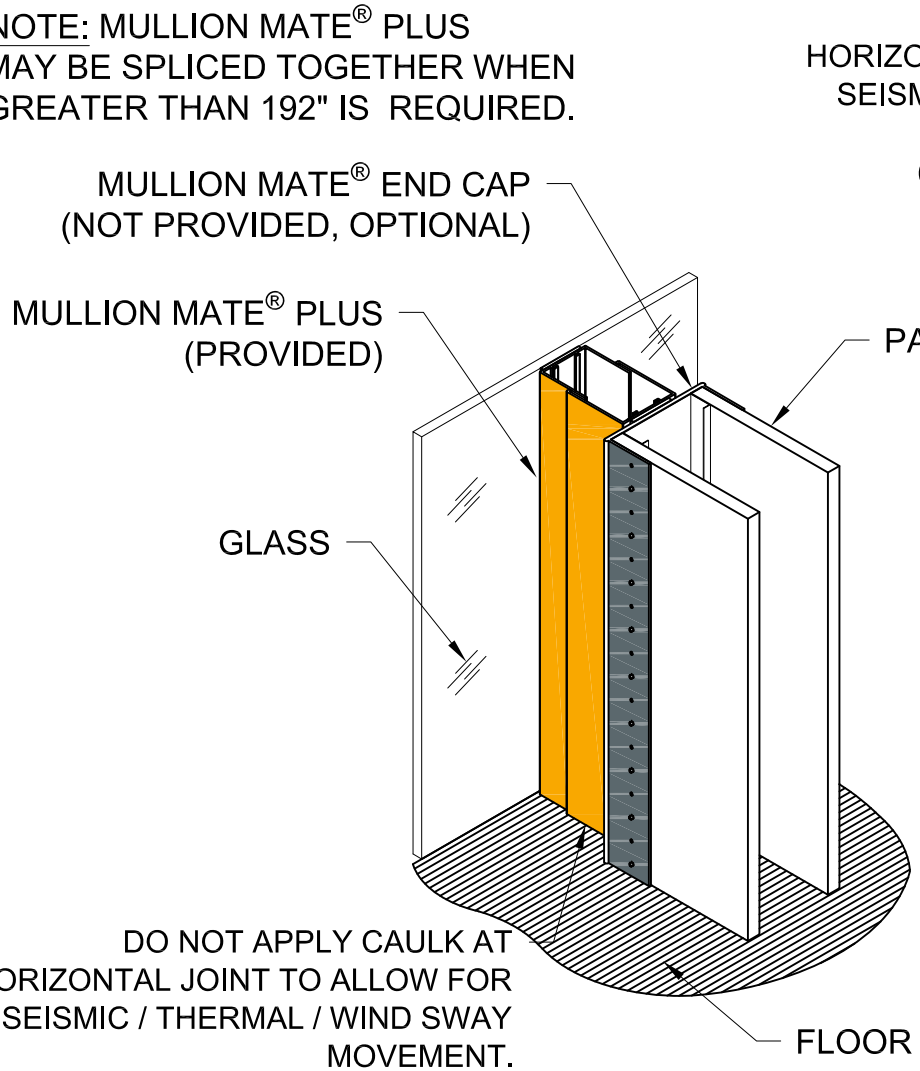

NOTE: EACH KIT INCLUDES, GASKET AND ACOUSTICAL CAULK.
ACOUSTICAL CAULK IS PROVIDED AS AN OPTIONAL ACCESSORY AND IS SUPPLIED IN A CLEAR, PAINTABLE FINISH.
END CAPS ARE OPTIONAL ACCESSORIES.

DETAIL AT FLOOR

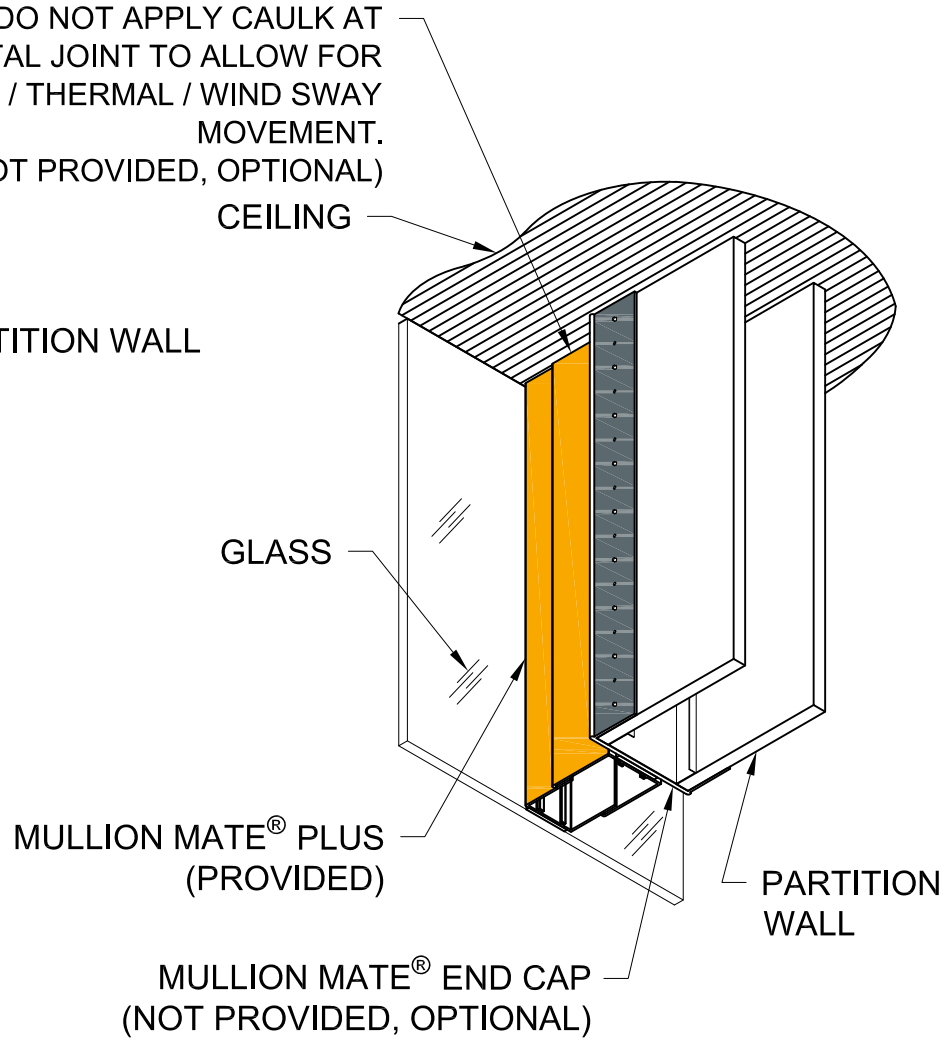

DETAIL AT CEILING

U.S. Patent No. 12,442,181

GORDON®
ARCHITECTURAL+ENGINEERED SOLUTIONS
5023 Hazel Jones Rd.
Bossier City, LA 71111
800.747.8954
GORDON-INC.COM
sales@gordon-inc.com

PARTITION GAP CLOSURES
MULLION MATE PLUS
WALL-TO-GLASS ISO VIEW

NOTE: MULLION MATE® PLUS MAY BE SPLICED TOGETHER WHEN GREATER THAN 192" IS REQUIRED.

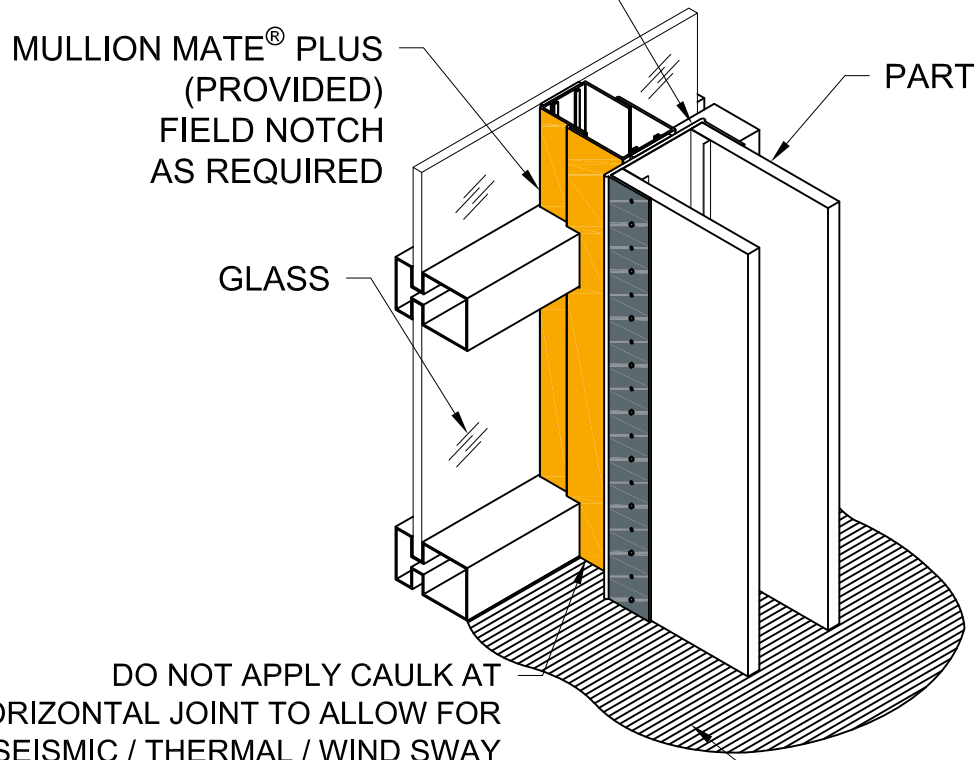

NOTE: EACH KIT INCLUDES, GASKET AND ACOUSTICAL CAULK.
ACOUSTICAL CAULK IS PROVIDED AS AN OPTIONAL ACCESSORY AND IS SUPPLIED IN A CLEAR, PAINTABLE FINISH.
END CAPS ARE OPTIONAL ACCESSORIES.

DETAIL AT FLOOR

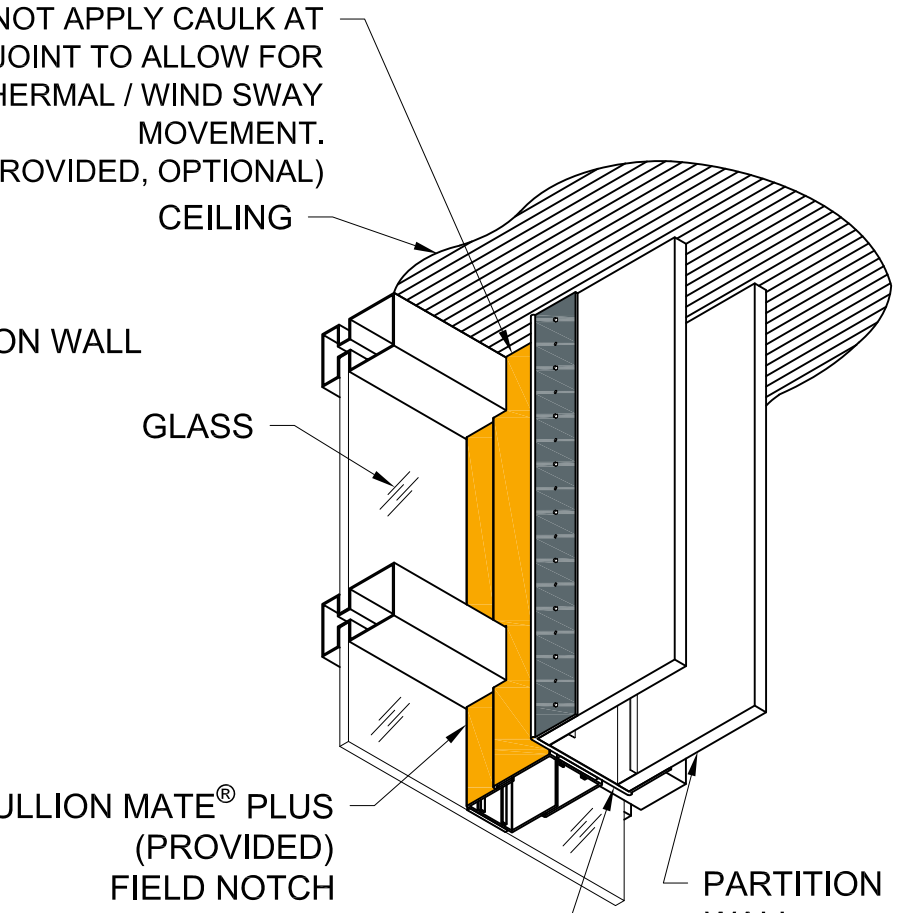

DETAIL AT CEILING

U.S. Patent No. 12,442,181

GORDON® ARCHITECTURAL+ENGINEERED SOLUTIONS
5023 Hazel Jones Rd.
Bossier City, LA 71111
800.747.8954
GORDON-INC.COM
sales@gordon-inc.com

PARTITION GAP CLOSURES
MULLION MATE PLUS
WALL-TO-GLASS (NOTCHED) ISO VIEW

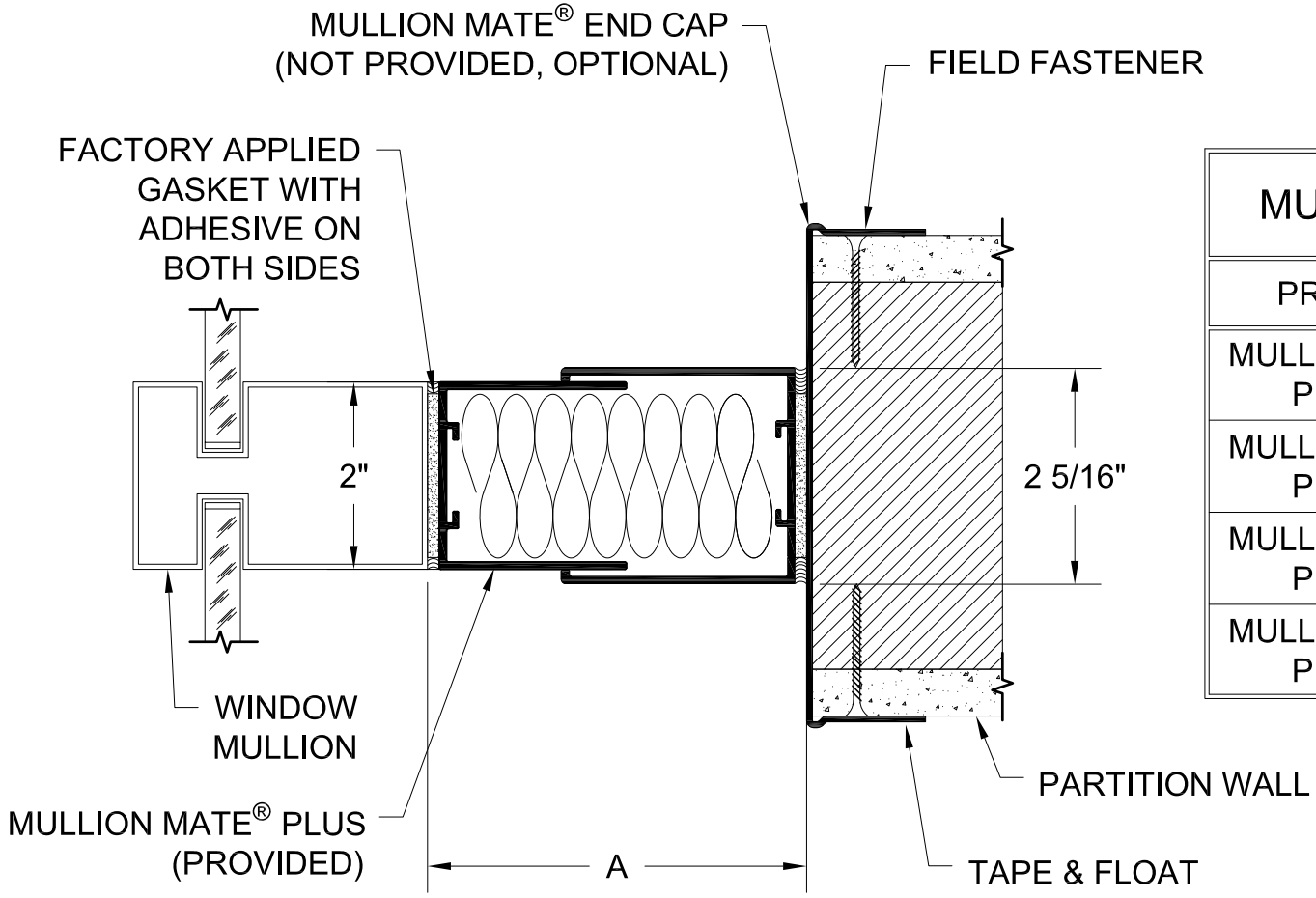

MULLION MATE® SIZING	
PRODUCT	DIM "A"
MULLION MATE® PLUS - 2	2" TO 2 15/16"
MULLION MATE® PLUS - 3	3" TO 3 15/16"
MULLION MATE® PLUS - 4	4" TO 4 15/16"
MULLION MATE® PLUS - 5	5" TO 6 15/16"

SECTION AT MULLION TO WALL

U.S. Patent No. 12,442,181

NOTE: EACH KIT INCLUDES, GASKET AND ACOUSTICAL CAULK.
ACOUSTICAL CAULK IS PROVIDED AS AN OPTIONAL ACCESSORY AND IS SUPPLIED IN A CLEAR, PAINTABLE FINISH.
END CAPS ARE OPTIONAL ACCESSORIES.

GORDON®
ARCHITECTURAL+ENGINEERED SOLUTIONS
5023 Hazel Jones Rd.
Bossier City, LA 71111
800.747.8954
GORDON-INC.COM
sales@gordon-inc.com

PARTITION GAP CLOSURE
MULLION MATE PLUS
2, 3, 4 & 5 SECTION

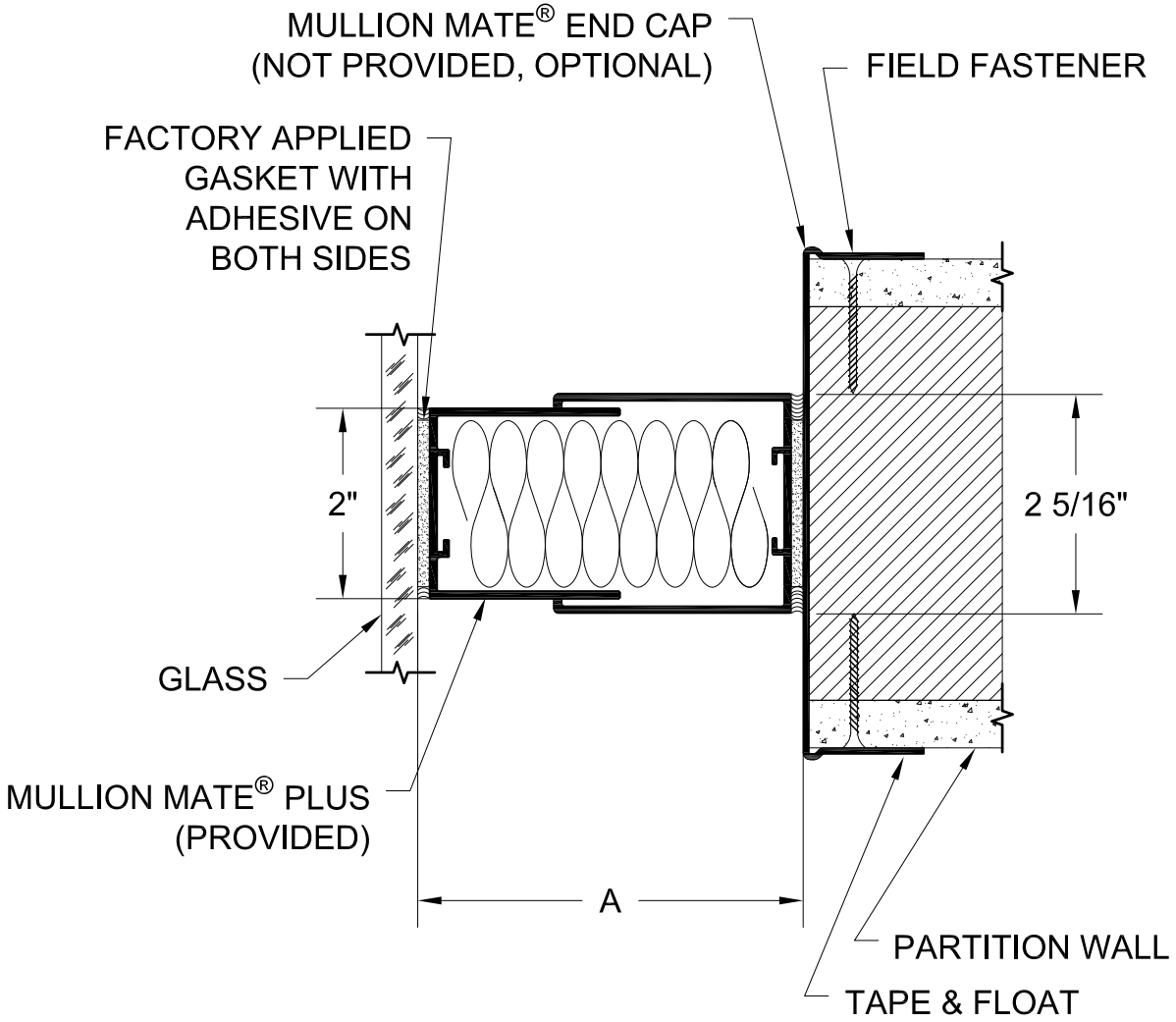

SECTION AT GLASS TO WALL

U.S. Patent No. 12,442,181

MULLION MATE® SIZING	
PRODUCT	DIM "A"
MULLION MATE® PLUS - 2	2" TO 2 15/16"
MULLION MATE® PLUS - 3	3" TO 3 15/16"
MULLION MATE® PLUS - 4	4" TO 4 15/16"
MULLION MATE® PLUS - 5	5" TO 6 15/16"

WALL-TO-GLASS APPLICATION

MULLION MATE® PLUS IS INSTALLED AGAINST MINIMUM 1/8" THICK GLASS. INSTALL THE GASKET AGAINST THE GLASS SIDE FIRST. CARE SHOULD BE GIVEN TO PROPERLY POSITION GASKET PRIOR TO CONTACTING GLASS.

NOTE: EACH KIT INCLUDES, GASKET AND ACOUSTICAL CAULK.
ACOUSTICAL CAULK IS PROVIDED AS AN OPTIONAL ACCESSORY AND IS SUPPLIED IN A CLEAR, PAINTABLE FINISH.
END CAPS ARE OPTIONAL ACCESSORIES.

GORDON®
ARCHITECTURAL+ENGINEERED SOLUTIONS
5023 Hazel Jones Rd.
Bossier City, LA 71111
800.747.8954
GORDON-INC.COM
sales@gordon-inc.com

PARTITION GAP CLOSURE
MULLION MATE PLUS
2, 3, 4 & 5 SECTION AT GLASS

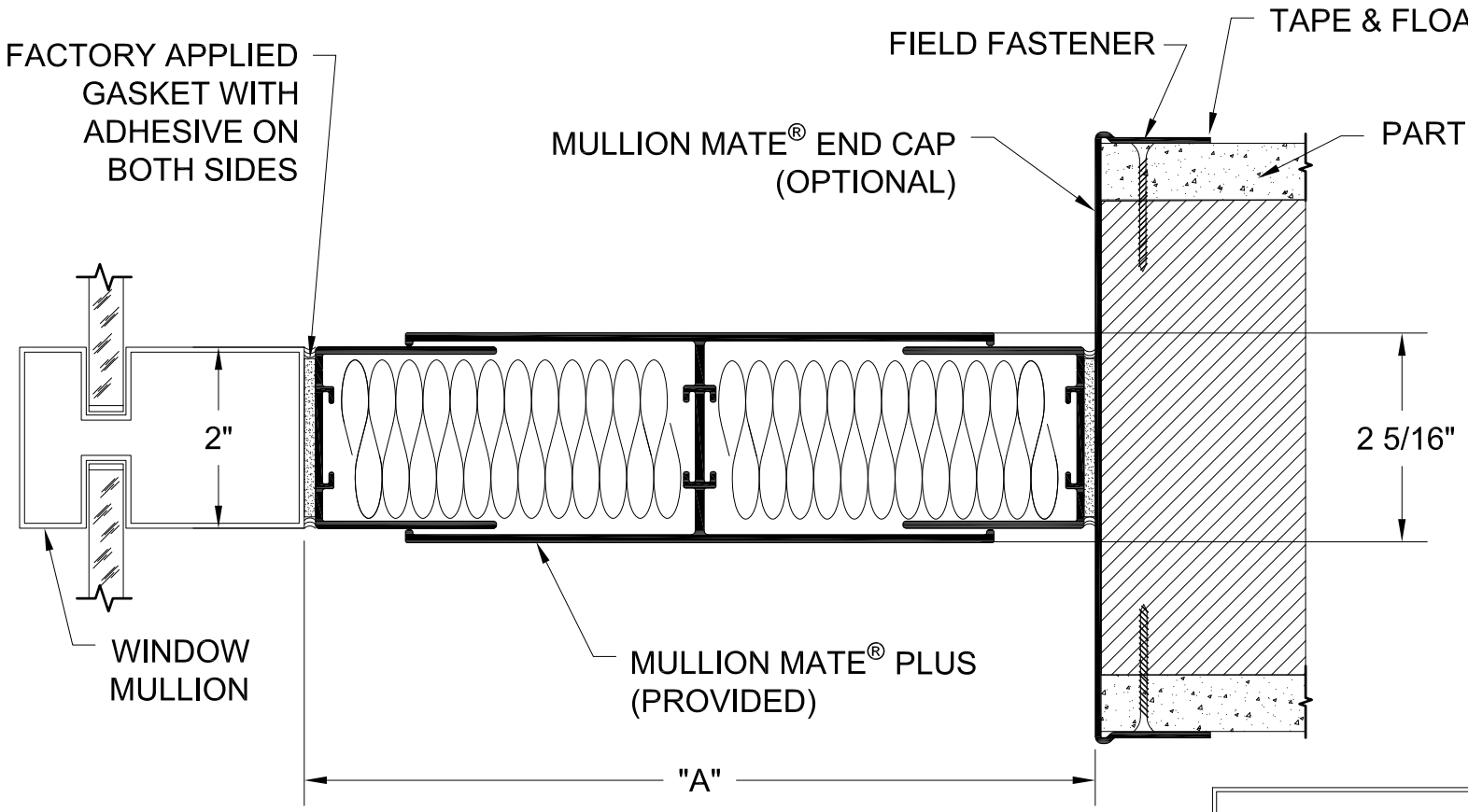

SECTION AT MULLION TO WALL

NOTE: EACH KIT INCLUDES, GASKET AND ACOUSTICAL CAULK.
ACOUSTICAL CAULK IS PROVIDED AS AN OPTIONAL ACCESSORY AND IS SUPPLIED IN A CLEAR, PAINTABLE FINISH.
END CAPS ARE OPTIONAL ACCESSORIES.

U.S. Patent No. 12,442,181

MULLION MATE® SIZING	
PRODUCT	DIM "A"
MULLION MATE® PLUS - 7	7" TO 8 15/16"
MULLION MATE® PLUS - 9	9" TO 13 1/2"

GORDON®
ARCHITECTURAL+ENGINEERED SOLUTIONS
5023 Hazel Jones Rd.
Bossier City, LA 71111
800.747.8954
GORDON-INC.COM
sales@gordon-inc.com

PARTITION GAP CLOSURE
MULLION MATE PLUS
7 & 9 SECTION AT MULLION

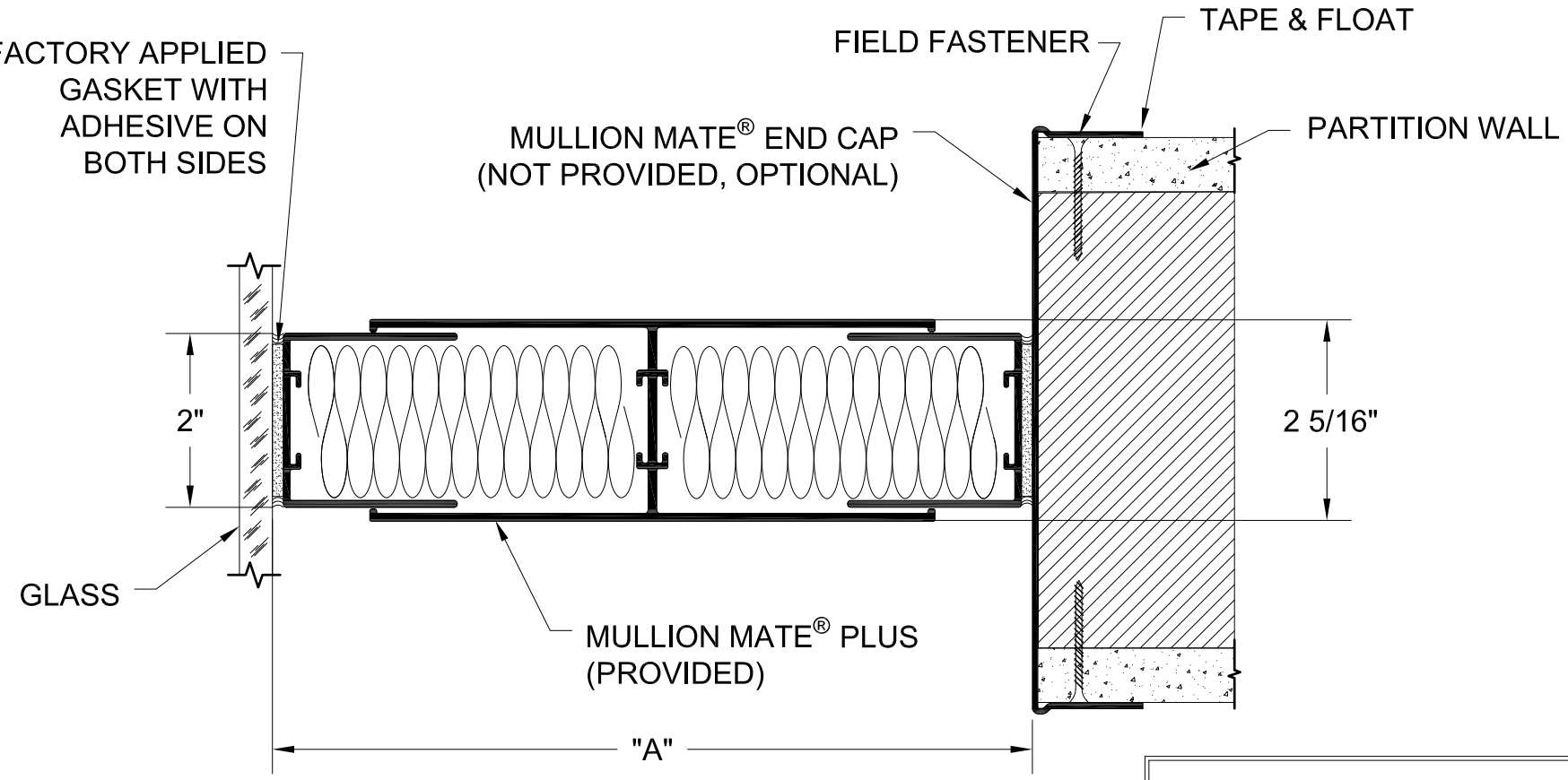

SECTION AT GLASS TO WALL

WALL-TO-GLASS APPLICATION
MULLION MATE® PLUS IS INSTALLED AGAINST MINIMUM 1/8" THICK GLASS. INSTALL THE GASKET AGAINST THE GLASS SIDE FIRST. CARE SHOULD BE GIVEN TO PROPERLY POSITION GASKET PRIOR TO CONTACTING GLASS.

U.S. Patent No. 12,442,181

NOTE: EACH KIT INCLUDES, GASKET AND ACOUSTICAL CAULK.
ACOUSTICAL CAULK IS PROVIDED AS AN OPTIONAL ACCESSORY AND IS SUPPLIED IN A CLEAR, PAINTABLE FINISH.
END CAPS ARE OPTIONAL ACCESSORIES.

MULLION MATE® SIZING	
PRODUCT	DIM "A"
MULLION MATE® PLUS - 7	7" TO 8 15/16"
MULLION MATE® PLUS - 9	9" TO 13 1/2"

GORDON®
ARCHITECTURAL+ENGINEERED SOLUTIONS
5023 Hazel Jones Rd.
Bossier City, LA 71111
800.747.8954
GORDON-INC.COM
sales@gordon-inc.com

PARTITION GAP CLOSURE
MULLION MATE PLUS
7 & 9 SECTION AT GLASS

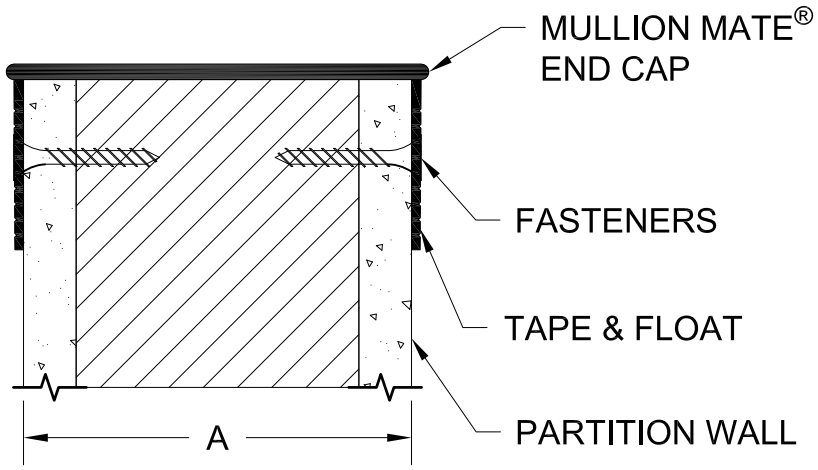

MULLION MATE® END CAPS	
PART #	"A"
MMEC-375	3 3/4"
MMEC-487	4 7/8"
MMECBF-518	5 1/8"
MMECBF-514	5 1/4"
MMEC-512	5 1/2"
MMEC-600	6"
MMEC-618	6 1/8"
MMEC-725	7 1/4"
MMEC-812	8 1/2"

* CONTACT FACTORY FOR OTHER SIZE OPTIONS

GORDON®
ARCHITECTURAL+ENGINEERED SOLUTIONS
5023 Hazel Jones Rd.
Bossier City, LA 71111
800.747.8954
GORDON-INC.COM
sales@gordon-inc.com

PARTITION GAP CLOSURES
MULLION MATE PLUS
END CAP SECTION