NOTE: MULLION MATE® PRO MAY BE SPLICED TOGETHER WHEN GREATER THAN 192" IS REQUIRED.

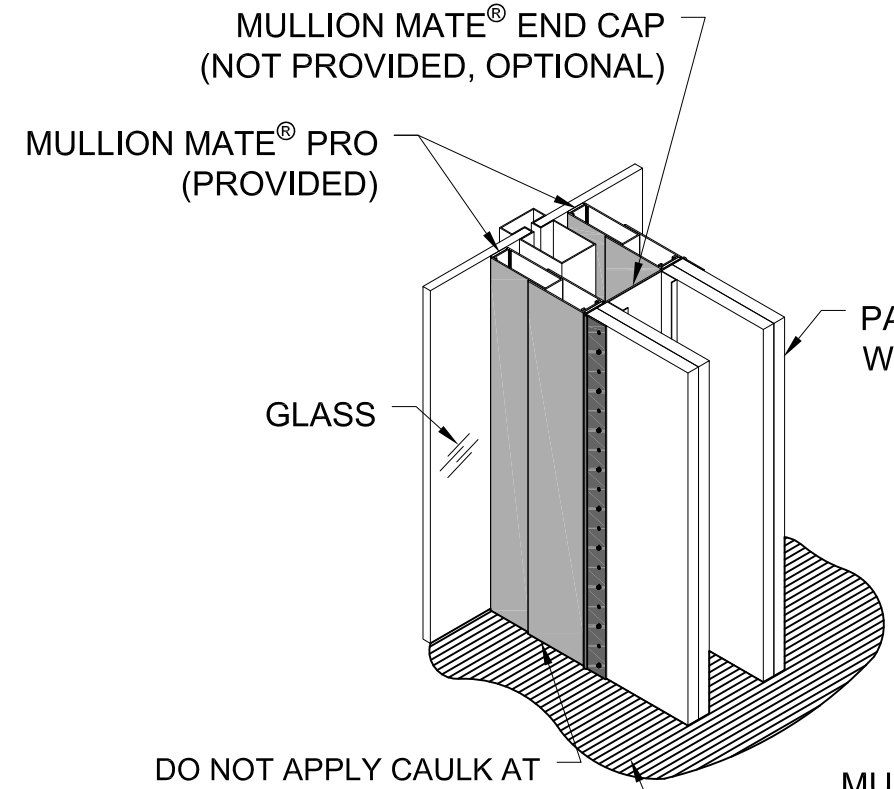

DETAIL AT FLOOR

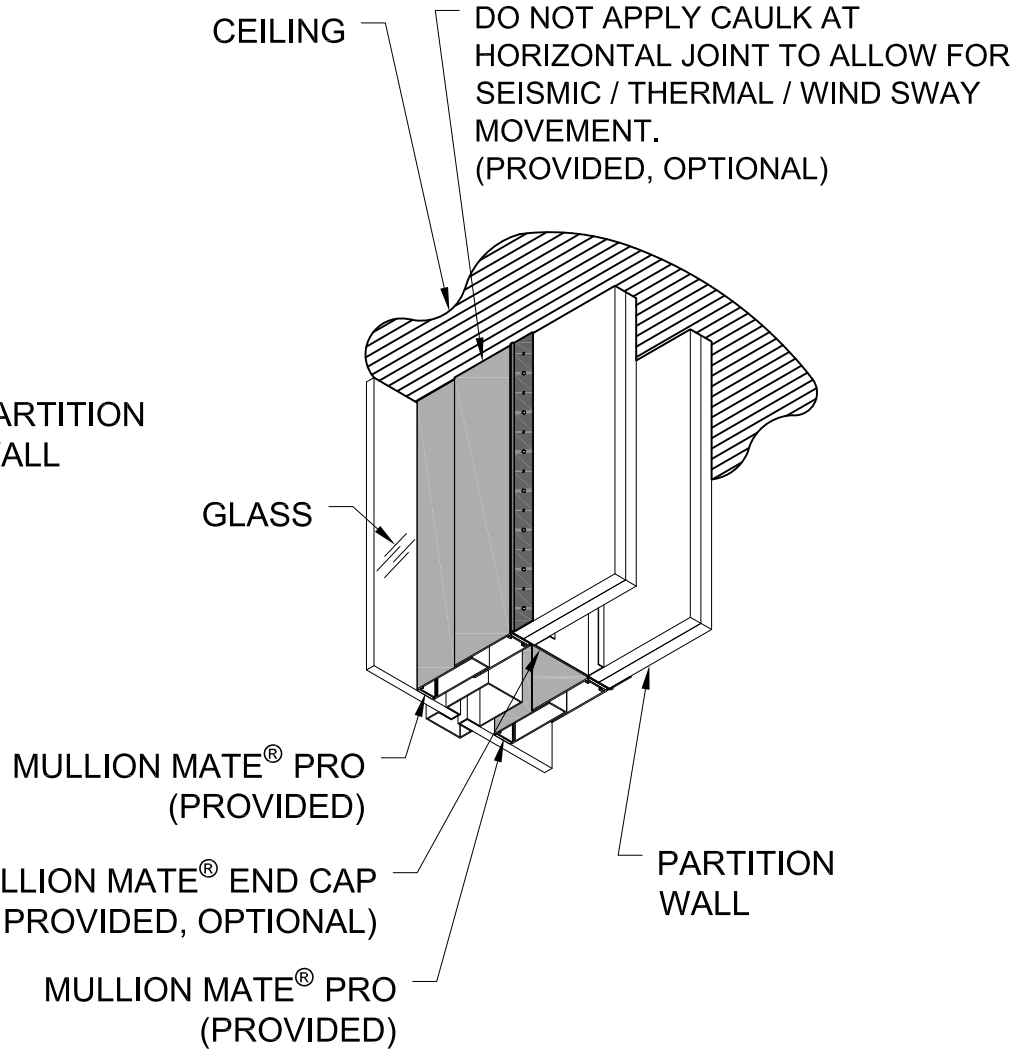

DETAIL AT CEILING

NOTE: EACH KIT INCLUDES, GASKET, INSULATION AND ACOUSTICAL CAULK. ACOUSTICAL CAULK IS PROVIDED AS AN OPTIONAL ACCESSORY AND IS SUPPLIED IN A CLEAR, PAINTABLE FINISH. END CAPS NOT INCLUDED.

U.S. PATENT NO. 12,024,881

GORDON®
ARCHITECTURAL+ENGINEERED SOLUTIONS
5023 Hazel Jones Rd.
Bossier City, LA 71111
800.747.8954
GORDON-INC.COM
sales@gordon-inc.com

PARTITION GAP CLOSURES
MULLION MATE PRO
WALL-TO-GLASS ISO VIEW

NOTE: MULLION MATE® PRO MAY BE SPLICED TOGETHER WHEN GREATER THAN 192" IS REQUIRED.

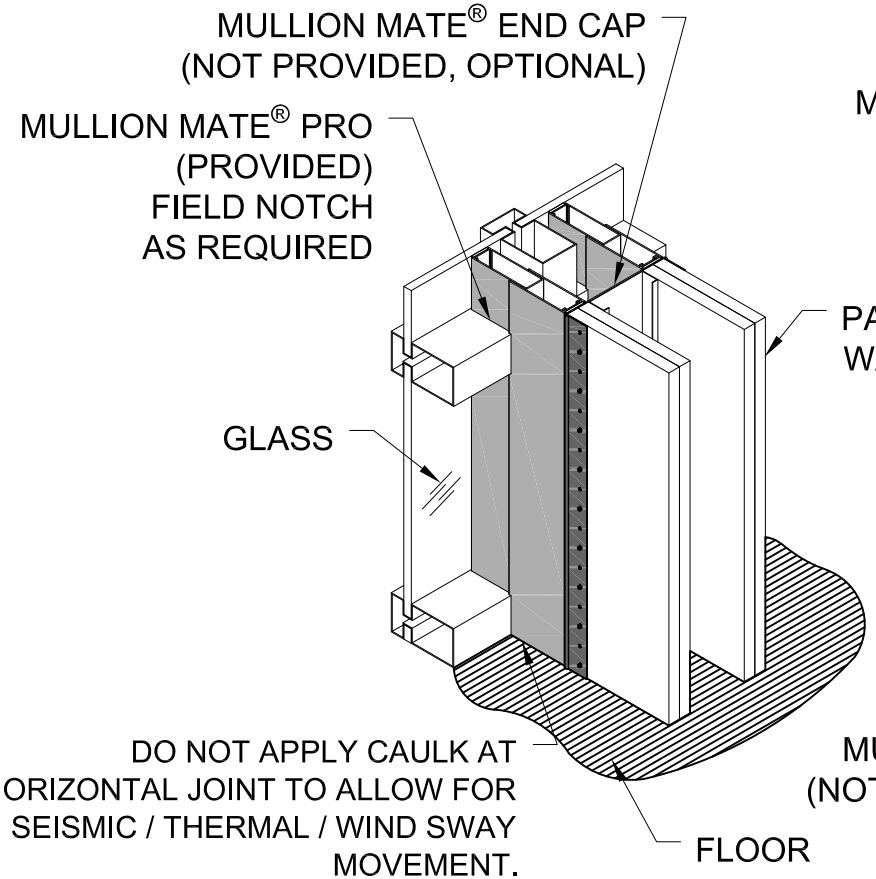

DETAIL AT FLOOR

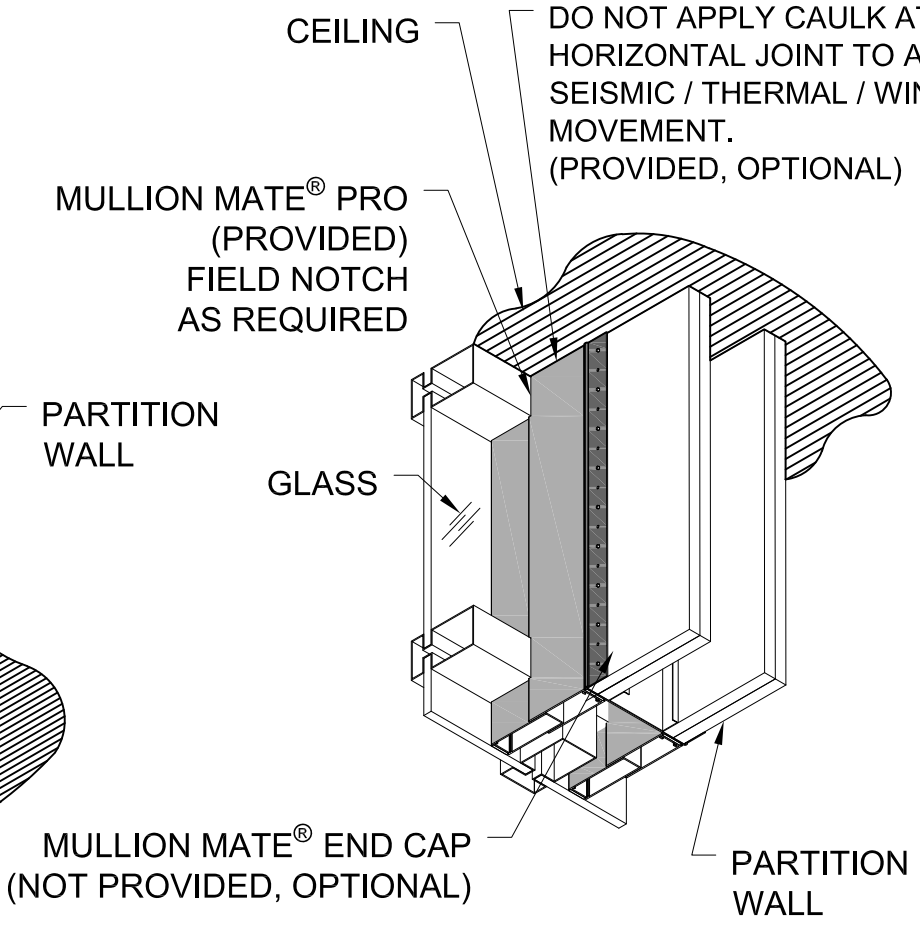

DETAIL AT CEILING

NOTE: EACH KIT INCLUDES, GASKET, INSULATION AND ACOUSTICAL CAULK. ACOUSTICAL CAULK IS PROVIDED AS AN OPTIONAL ACCESSORY AND IS SUPPLIED IN A CLEAR, PAINTABLE FINISH. END CAPS NOT INCLUDED.

U.S. PATENT NO. 12,024,881

GORDON®
ARCHITECTURAL+ENGINEERED SOLUTIONS
5023 Hazel Jones Rd.
Bossier City, LA 71111
800.747.8954
GORDON-INC.COM
sales@gordon-inc.com

PARTITION GAP CLOSURES
MULLION MATE PRO
WALL-TO-GLASS (NOTCHED) ISO VIEW

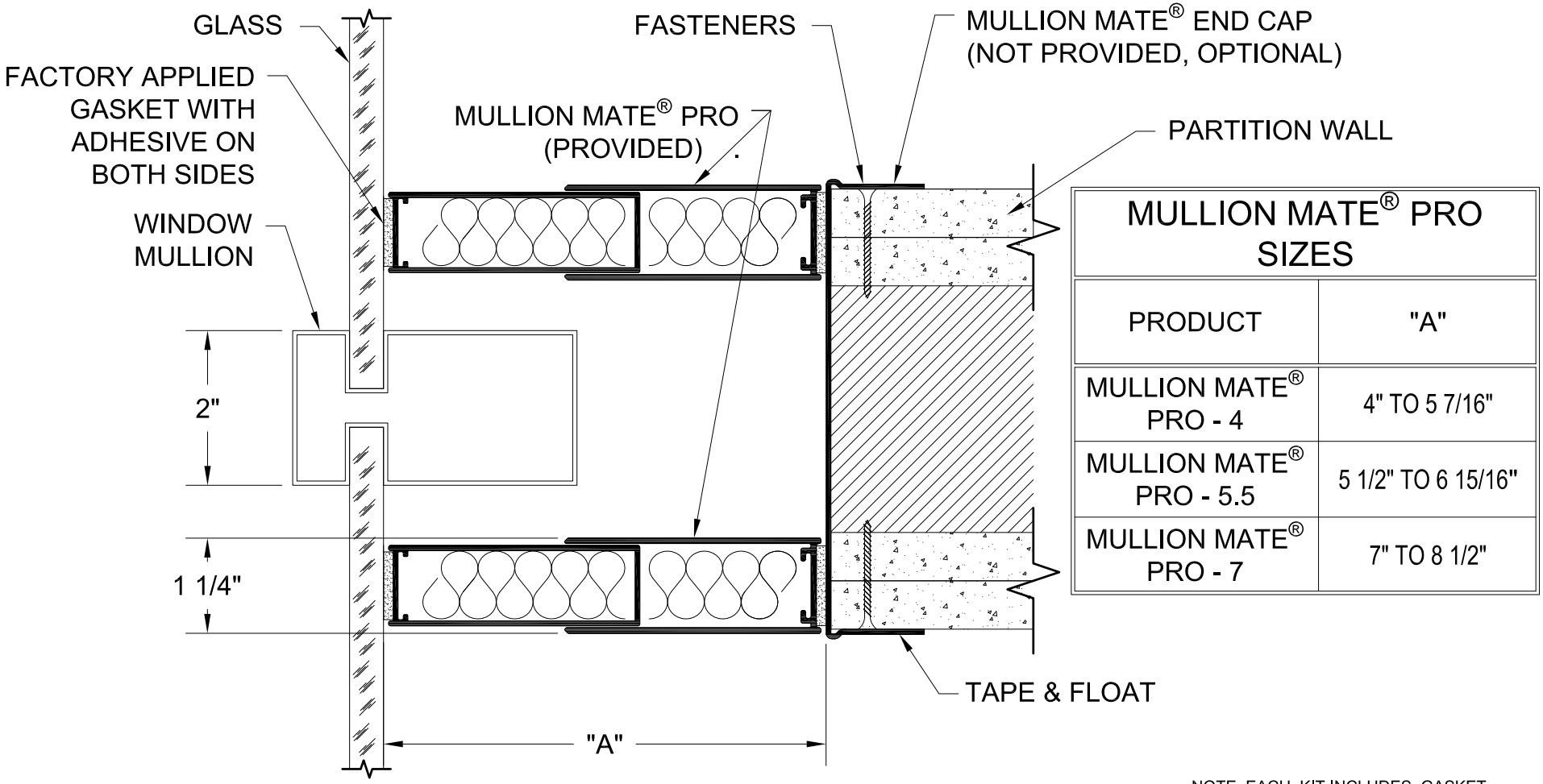

MULLION MATE® PRO SIZES	
PRODUCT	"A"
MULLION MATE® PRO - 4	4" TO 5 7/16"
MULLION MATE® PRO - 5.5	5 1/2" TO 6 15/16"
MULLION MATE® PRO - 7	7" TO 8 1/2"

WALL-TO-GLASS APPLICATION

MULLION MATE® PRO IS INSTALLED AGAINST MINIMUM 1/8" THICK GLASS. INSTALL THE GASKET AGAINST THE GLASS SIDE FIRST. CARE SHOULD BE GIVEN TO PROPERLY POSITION GASKET PRIOR TO CONTACTING GLASS.

NOTE: EACH KIT INCLUDES, GASKET, INSULATION AND ACOUSTICAL CAULK. ACOUSTICAL CAULK IS PROVIDED AS AN OPTIONAL ACCESSORY AND IS SUPPLIED IN A CLEAR, PAINTABLE FINISH. END CAPS NOT INCLUDED.

U.S. PATENT NO. 12,024,881

GORDON®
ARCHITECTURAL+ENGINEERED SOLUTIONS
5023 Hazel Jones Rd.
Bossier City, LA 71111
800.747.8954
GORDON-INC.COM
sales@gordon-inc.com

PARTITION GAP CLOSURES
MULLION MATE PRO
SECTION

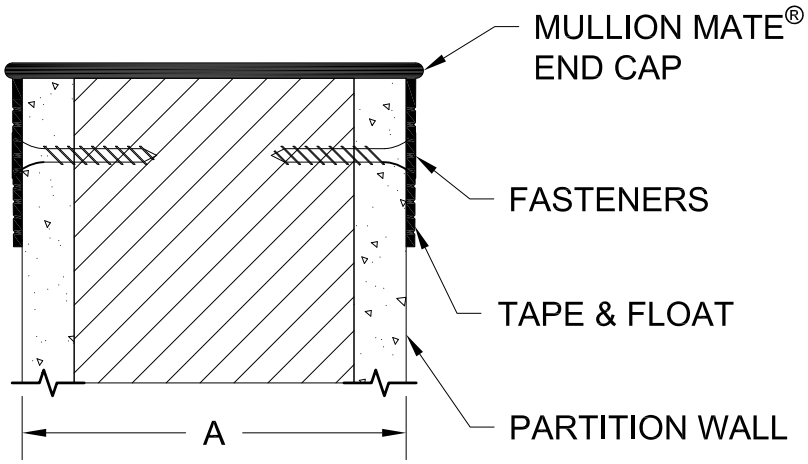

MULLION MATE® END CAPS	
PART #	"A"
MMEC-375	3 3/4"
MMEC-487	4 7/8"
MMECBF-518	5 1/8"
MMECBF-514	5 1/4"
MMEC-512	5 1/2"
MMEC-600	6"
MMEC-618	6 1/8"
MMEC-725	7 1/4"
MMEC-812	8 1/2"

* CONTACT FACTORY FOR OTHER SIZE OPTIONS

GORDON®
ARCHITECTURAL+ENGINEERED SOLUTIONS
5023 Hazel Jones Rd.
Bossier City, LA 71111
800.747.8954
GORDON-INC.COM
sales@gordon-inc.com

PARTITION GAP CLOSURES
MULLION MATE PRO
END CAP SECTION