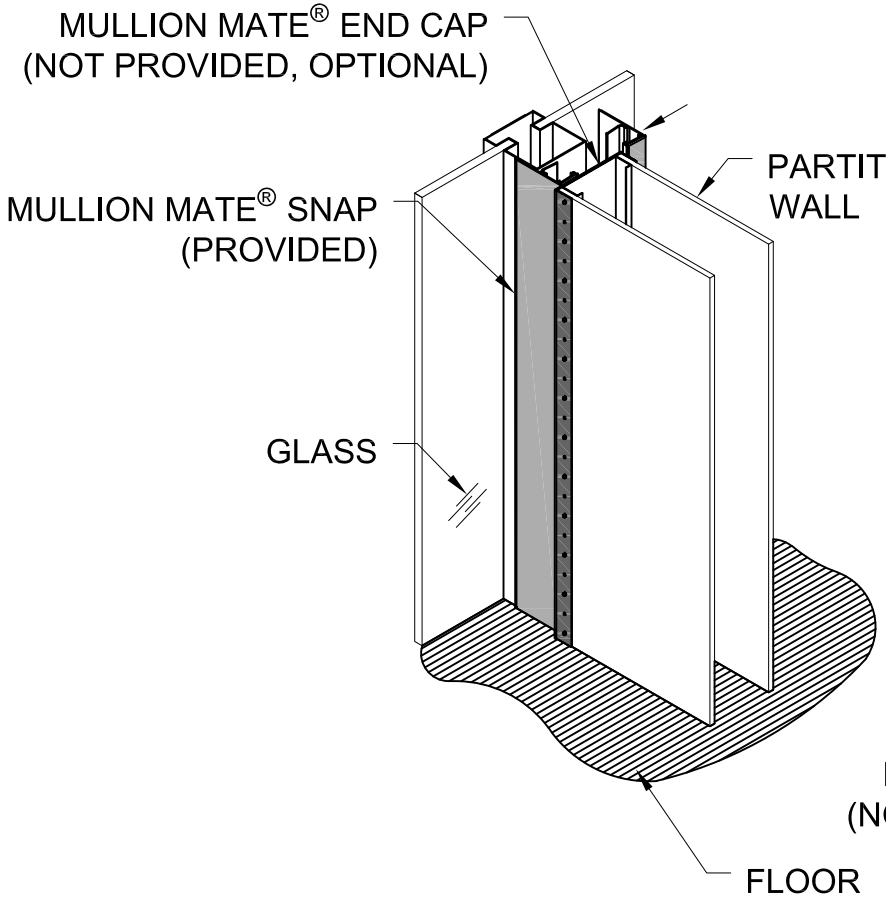

DETAIL AT FLOOR

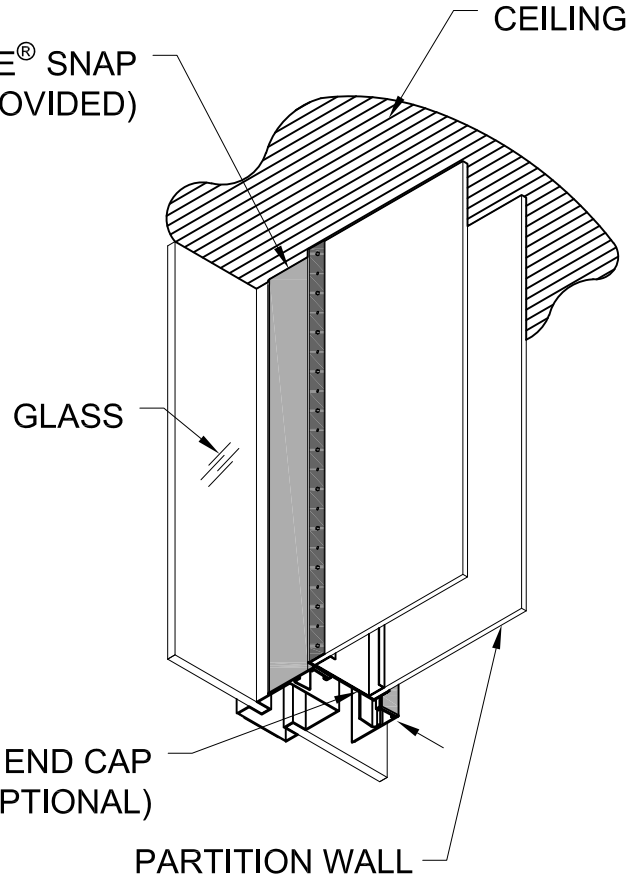

DETAIL AT CEILING

NOTE: EACH KIT INCLUDES, GASKET,
SPRING CLIPS.
END CAPS ARE OPTIONAL ACCESSORIES.

U.S. PATENT NO. 12,209,407

GORDON®
ARCHITECTURAL+ENGINEERED SOLUTIONS

5023 Hazel Jones Rd.
Bossier City, LA 71111
800.747.8954
GORDON-INC.COM
sales@gordon-inc.com

PARTITION GAP CLOSURES
MULLION MATE SNAP
WALL-TO-GLASS ISO VIEW

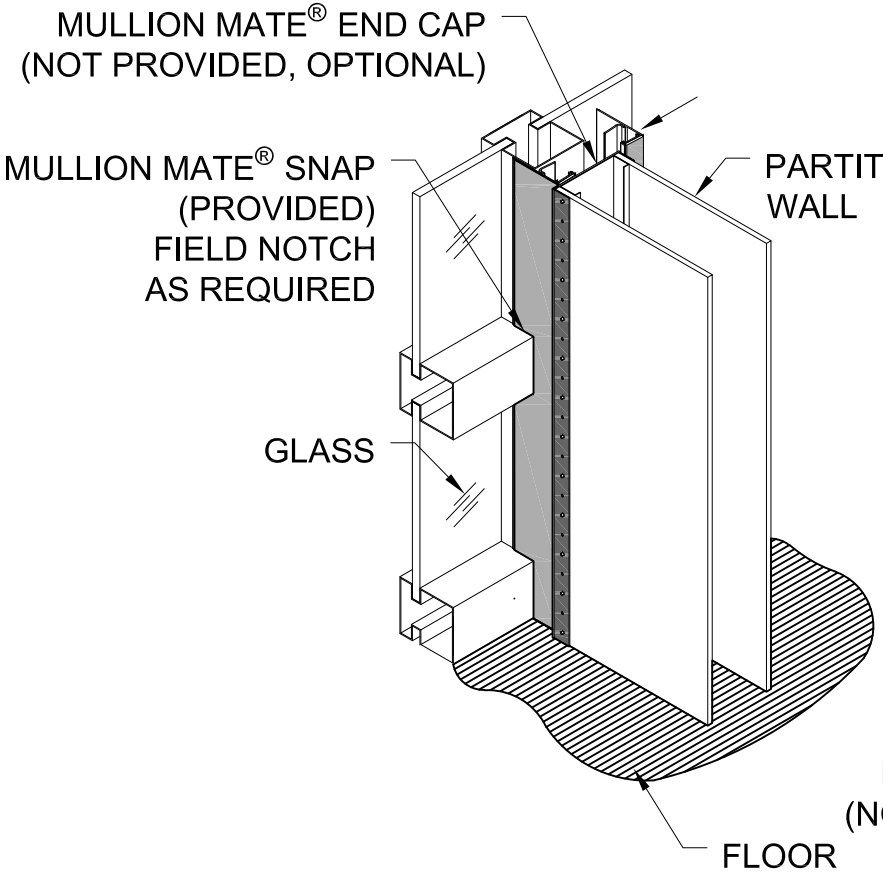

DETAIL AT FLOOR

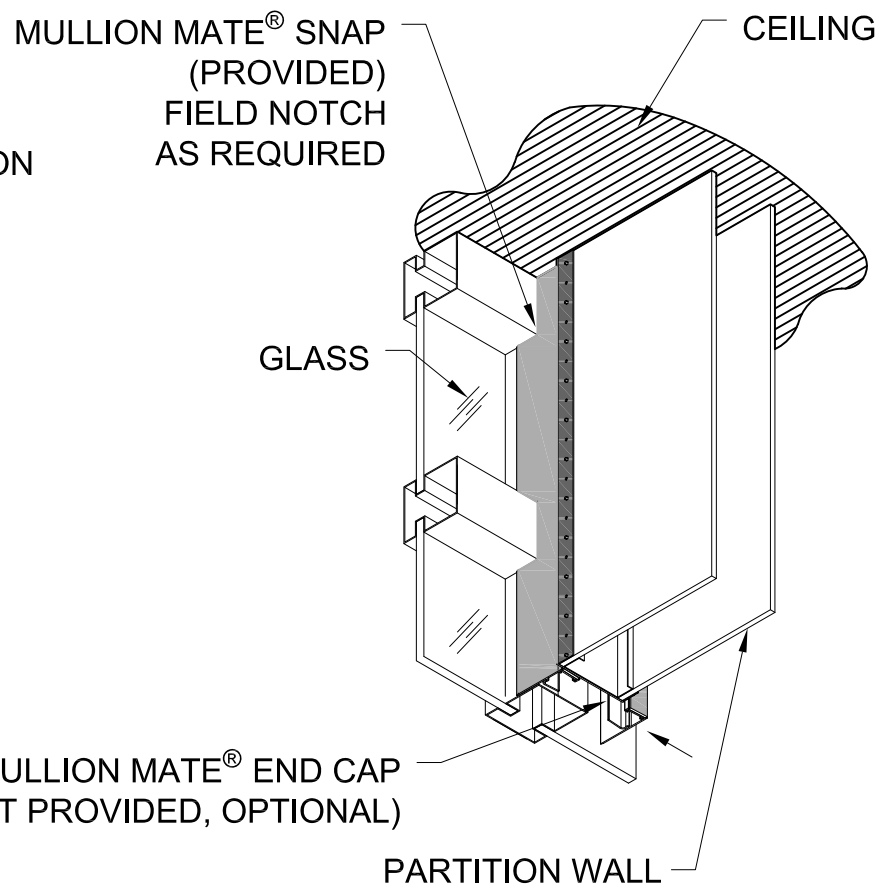

DETAIL AT CEILING

NOTE: EACH KIT INCLUDES, GASKET,
SPRING CLIPS.
END CAPS ARE OPTIONAL ACCESSORIES.

U.S. PATENT NO. 12,209,407

GORDON®
ARCHITECTURAL+ENGINEERED SOLUTIONS
5023 Hazel Jones Rd.
Bossier City, LA 71111
800.747.8954
GORDON-INC.COM
sales@gordon-inc.com

PARTITION GAP CLOSURES
MULLION MATE SNAP
WALL-TO-GLASS (NOTCHED) ISO VIEW

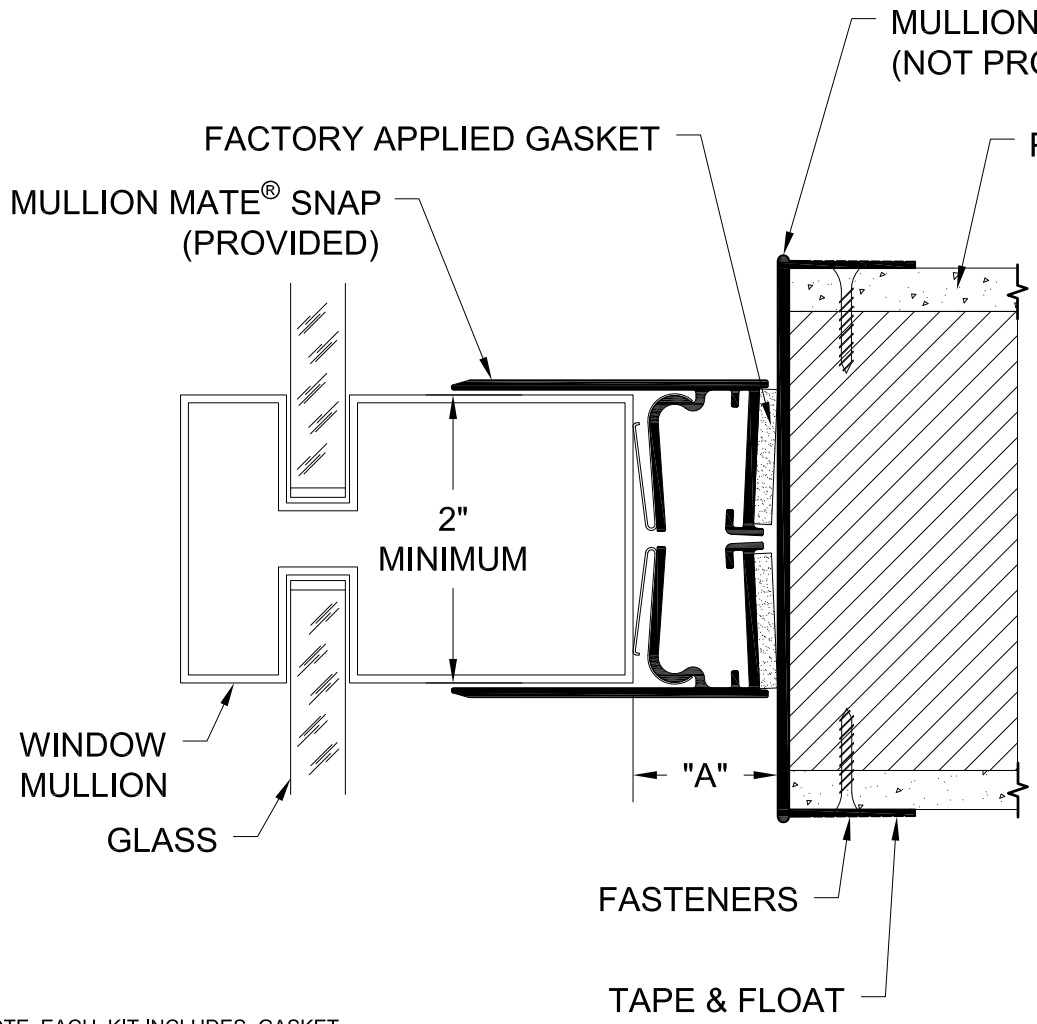

MULLION MATE® SNAP SIZES	
PRODUCT	"A"
MULLION MATE® SNAP - 1	1" TO 1 7/16"
MULLION MATE® SNAP - 1.5	1 1/2" TO 2"

NOTE: EACH KIT INCLUDES, GASKET, SPRING CLIPS.
END CAPS ARE OPTIONAL ACCESSORIES.

U.S. PATENT NO. 12,209,407

GORDON®
ARCHITECTURAL+ENGINEERED SOLUTIONS
5023 Hazel Jones Rd.
Bossier City, LA 71111
800.747.8954
GORDON-INC.COM
sales@gordon-inc.com

PARTITION GAP CLOSURES
MULLION MATE SNAP
1 & 1.5 SECTION

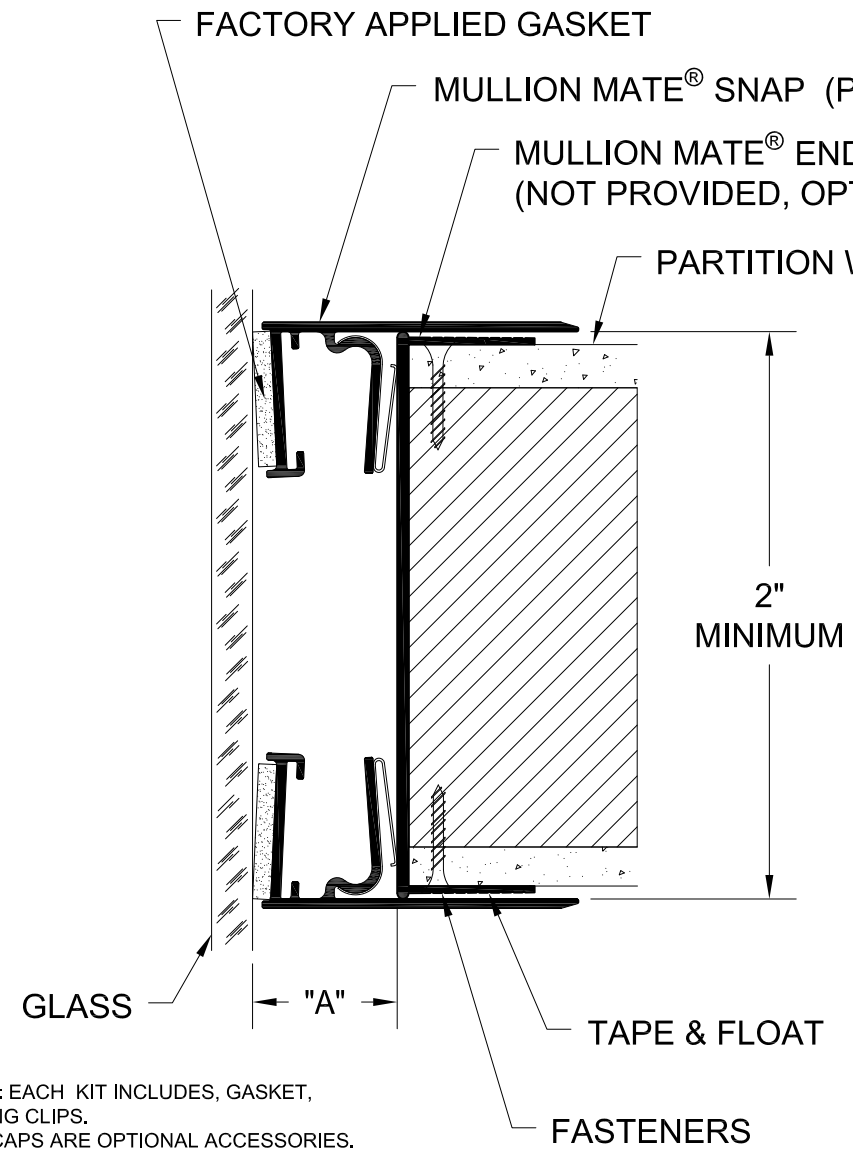

MULLION MATE® SNAP SIZES	
PRODUCT	"A"
MULLION MATE® SNAP - 1	1" TO 1 7/16"
MULLION MATE® SNAP - 1.5	1 1/2" TO 2"

WALL-TO-GLASS APPLICATION
MULLION MATE® SNAP MUST BE INSTALLED AGAINST MINIMUM 1/8" THICK GLASS.

NOTE: EACH KIT INCLUDES, GASKET, SPRING CLIPS.
END CAPS ARE OPTIONAL ACCESSORIES.

U.S. PATENT NO. 12,209,407

GORDON®
ARCHITECTURAL+ENGINEERED SOLUTIONS
5023 Hazel Jones Rd.
Bossier City, LA 71111
800.747.8954
GORDON-INC.COM
sales@gordon-inc.com

PARTITION GAP CLOSURES
MULLION MATE SNAP
1 & 1.5 SECTION

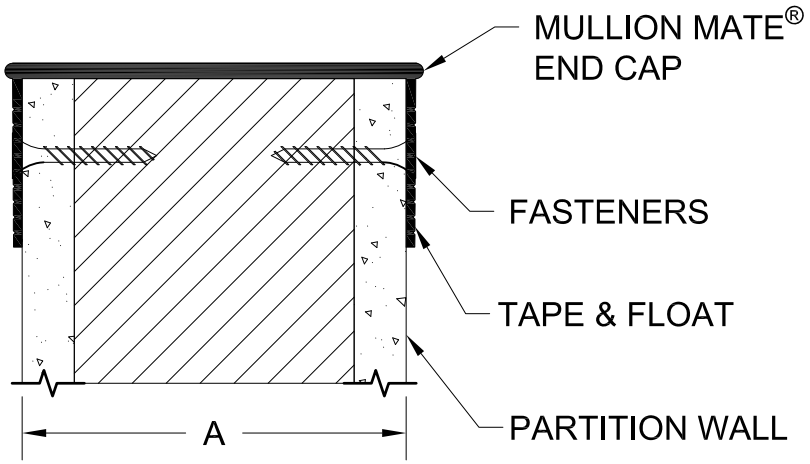

MULLION MATE® END CAPS	
PART #	"A"
MMEC-375	3 3/4"
MMEC-487	4 7/8"
MMECBF-518	5 1/8"
MMECBF-514	5 1/4"
MMEC-512	5 1/2"
MMEC-600	6"
MMEC-618	6 1/8"
MMEC-725	7 1/4"
MMEC-812	8 1/2"

* CONTACT FACTORY FOR OTHER SIZE OPTIONS

GORDON®
ARCHITECTURAL+ENGINEERED SOLUTIONS
5023 Hazel Jones Rd.
Bossier City, LA 71111
800.747.8954
GORDON-INC.COM
sales@gordon-inc.com

PARTITION GAP CLOSURES
MULLION MATE® SNAP
END CAP SECTION