TRUFORM™

Extruded Aluminum Architectural Profiles

Millwork Profiles

Installation Instructions

GORDON
ARCHITECTURAL+ENGINEERED SOLUTIONS

PART 1 - STORAGE AND HANDLING

1. After receiving materials, transfer material immediately to a safe, dry, climate-controlled place where it will not be damaged during storage.
    a. Do not store Gordon, Inc. product or components outdoors.
    b. Store Crates and / or Cartons flat in a dry location away from activity.
    c. Do not store near corrosive material such as acids, salt, fertilizer, etc.
    d. All materials should be protected during site storage to prevent damage to the finished work from other trades.
    e. Store materials inside a well-insulated area, away from concrete and masonry and protected from the weather, moisture, soiling, abrasion, extreme temperatures and humidity.
    f. Protect the strippable protective covering on metal panels from exposure to sunlight, heat, and high humidity.
    g. Store product in Gordon, Inc.'s unopened packaging until installation of product.
    h. Prevent contact with material that may cause discoloration, staining, or corrosion.
    i. Store in flat, fully supported position.
    j. Store to prevent twisting, bending, abrasion, scratching, and denting.
    k. Do not drop or stand containers on edges or corners.
    l. Gordon, Inc. components and systems are not packaged to receive the load of any other material stored or stacked upon it. Therefore, DO NOT DOUBLE STACK OR STORE OTHER MATERIAL on top of the packages or crates.
2. Inspect all material prior to installation. Do not install any substandard or unacceptable material. Gordon, Inc. will not be responsible for the cost of repair or removal, or costs resulting from removal of rejected material, or the installation of replacement material.
3. To avoid lasting deformation of the Truform™ Architectural Profiles when exposed to temperature and humidity extremes, store this material at or near room temperature. Allow a minimum of 48 hours before installation for the product to adjust to internal room temperature and humidity conditions before installing the Truform™ Architectural Profiles.
4. Material should be cleaned thoroughly prior to installation.

PART 2 - INSTALLATION

Truform™ Architectural Profiles are designed to be easily installed and field cut to fit varying job conditions. Truform™ Millwork Profiles feature a straight, flat flange for direct attachment over the wall or ceiling substrate. Installed onto the wall or ceiling substrate, they offer a decorative architectural detail between millwork or architectural glass panels. (For more information on the Truform™ product offering contact a Truform™ service representative at 800-747-8954).

2.01 - APPLICABLE CODES AND STANDARDS FOR INSTALLATION

1. Project Specifications
2. Architect approved Shop Drawings

2.02 - SPECIAL TOOLS REQUIRED

If field cutting is required:

- Fine tooth saw with a blade recommended for cutting aluminum or metal.
- Wax stick or similar lubricant.

2.03 - INSTALLATION OF TRUFORM™ MILLWORK PROFILES

Prior to installation: For best results, store this material at or near room temperature. This is strongly recommended to avoid lasting deformation of the internal components when exposed to temperature and humidity extremes. Allow a minimum of 48 hours before installation for product to adjust to internal room temperature and humidity conditions.

Step 1:

Select finish, size and depth of the Truform Profile based on the millwork or glass panel assembly thickness (panel + z clip) as specified. Layout wall or ceiling surface with chalk lines.

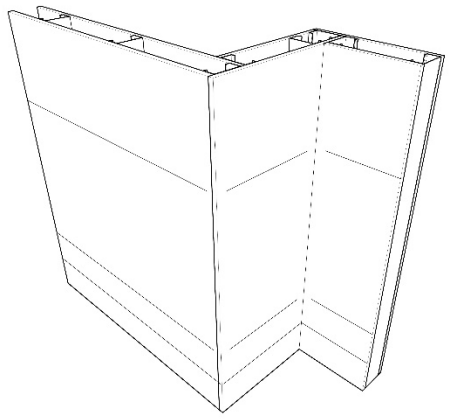

Step 2:

Cut Truform™ Millwork Profile to the proper length. Corners should be mitered. Butt joints should be tight and fastened within 3” of ends.

Use a fine-tooth metal cutting saw blade on a chop saw capable of turning 4,000 rpm. Use a wax stick or similar lubricant on the blade prior to cutting.

Notching may be required on specific installations that require a continuous bar at a three-way or four-way intersection. Bandsaws and metal snips are effective tools for notching.

Step 3:

Screw the profile through the factory-punched, slotted holes 8” to 24” O.C. with #6 bugle head drywall screws. Screws should tap studs where possible. Ensure screw length is a minimum of 5/8” longer than the thickness of the GPDW. Heavy duty staples may also be used.

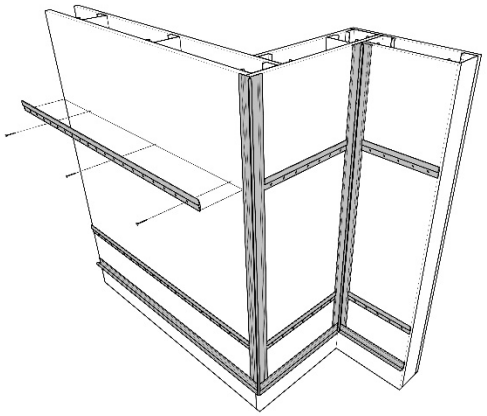

Step 4:

Install Millwork per manufacturer’s recommended installation procedure. Truform™ Millwork Z-Clips are available for typical attachment of millwork panels. Contact a Truform™ service representative for more information at 800-747-8954.

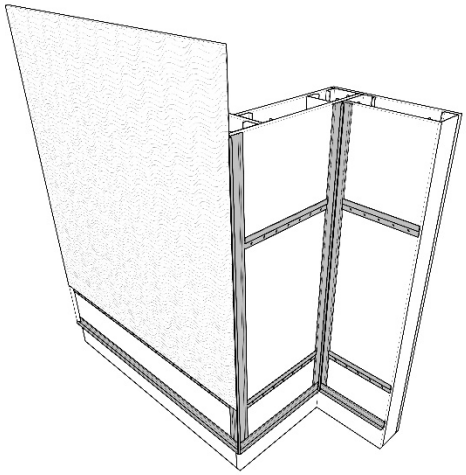

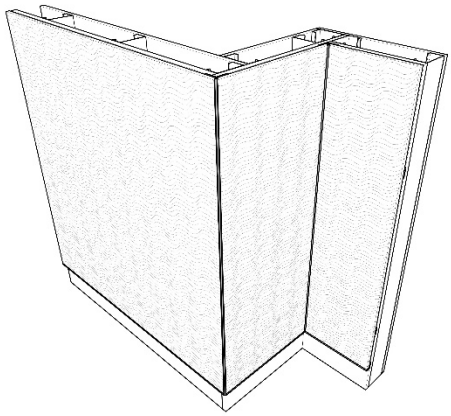

2.04 – FACTORY FABRICATED INTERSECTIONS

Factory fabricated intersections are available for Truform™ Millwork Profiles. Intersections are available for both four-way and three-way intersections as well as inside corners, outside corners, and “L” intersections. The joints are mitered and factory welded. Custom length legs and custom angles are available. For more information, contact a Truform™ service representative at 800-747-8954.

2.05 – FACTORY CURVING

Truform™ Millwork Profiles can be factory curved. Factory curving is available for most profiles in the form of inside curve, outside curve, arch, and reverse arch. For more information, contact a Truform™ service representative at 800-747-8954.

GORDON®
ARCHITECTURAL+ENGINEERED SOLUTIONS

5023 Hazel Jones Road
Bossier City, LA 71111
800-747-8954

www.gordon-inc.com
sales@mullionmate.com