[1]WinLok® Accessible Beam Baffle Cassette Ceiling System

Installation Instructions

GORDON®
ARCHITECTURAL+ENGINEERED SOLUTIONS

[1]WinLok® Patent No.: US 10,113,317; US 11,168,477; US 12,049,758

PART 1 - STORAGE AND HANDLING

1. After receiving materials, transfer material immediately to a safe, dry, climate-controlled place where it will not be damaged during storage.
    a. Do not store Gordon, Inc. product or components outdoors.
    b. Store Crates and / or Cartons flat in a dry location away from activity.
    c. Do not store near corrosive material such as acids, salt, fertilizer, etc.
    d. All materials should be protected during site storage to prevent damage to the finished work from other trades.
    e. Store materials inside a well-insulated area, away from concrete and masonry and protected from the weather, moisture, soiling, abrasion, extreme temperatures and humidity.
    f. Protect the strippable protective covering on metal panels from exposure to sunlight, heat, and high humidity.
    g. Store product in Gordon's unopened packaging until installation of product.
    h. Prevent contact with material that may cause discoloration, staining, or corrosion.
    i. Store in flat, fully supported position.
    j. Store to prevent twisting, bending, abrasion, scratching, and denting.
    k. Do not drop or stand containers on edges or corners.
    l. Gordon, Inc. components and systems are not packaged to receive the load of any other material stored or stacked upon it. Therefore, DO NOT DOUBLE STACK OR STORE OTHER MATERIAL on top of the packages or crates.
2. Inspect all material prior to installation. Do not install any substandard or unacceptable material. Gordon, Inc. will not be responsible for the cost of repair or removal, or costs resulting from removal of rejected material, or the installation of replacement material.
3. Material should be cleaned thoroughly prior to installation.

PART 2 - INSTALLATION

[1]WinLok® Accessible Beam Baffle Cassette Ceiling System shall be installed in accordance with ASTM C-636, "Installation of Metal Ceiling Suspension Systems for Acoustical Tile and Lay-In Ceilings." Below is recommended installation sequence.

2.01 - APPLICABLE CODES AND STANDARDS FOR INSTALLATION

1. Project specifications
2. Architect approved Shop Drawings
3. American Society for Testing and Materials (ASTM)
    - ASTM C-636: Installation of Metal Ceiling Suspension Systems for Acoustical Tile and Lay-In Ceilings

2.02 - SPECIAL TOOLS REQUIRED

- [1]WinLok® Removal Tool
- Channel-Lock or other adjustable-type pliers
- Laser leveling and alignment tool
- Cordless Screwdriver

[1] WinLok® Patent No: US 10,113,317; US 11,168,477; US 12,049,758

- #2 Phillips Screwdriver Bit
- 1/8” Hex Screwdriver Bit

If field cutting is required for Main Tees:

- Fine tooth saw with a blade recommended for cutting aluminum or metal.
- Wax stick or similar lubricant.
- Painter’s tape/masking applied tape to prevent scratches or damage to area of cut.

2.03 - INSTALLATION SEQUENCE

Step 1:

Position [1]WinLok® Main Tees per approved Shop Drawings. Note: Main Tees run perpendicular to the Beam Baffle direction. Main Tees will be positioned at perimeter ends of Beam Baffle Cassettes and at joint/seams of abutting Beam Baffle Cassettes.

Step 2:

Starting at a perimeter corner hang Main Tee with 12 GA Hanger Wires (by installer) to the appropriate height above finish floor (AFF). Main Tees to have Hanger Wires located maximum 4’ O.C. with a Compression Strut located every 8’.

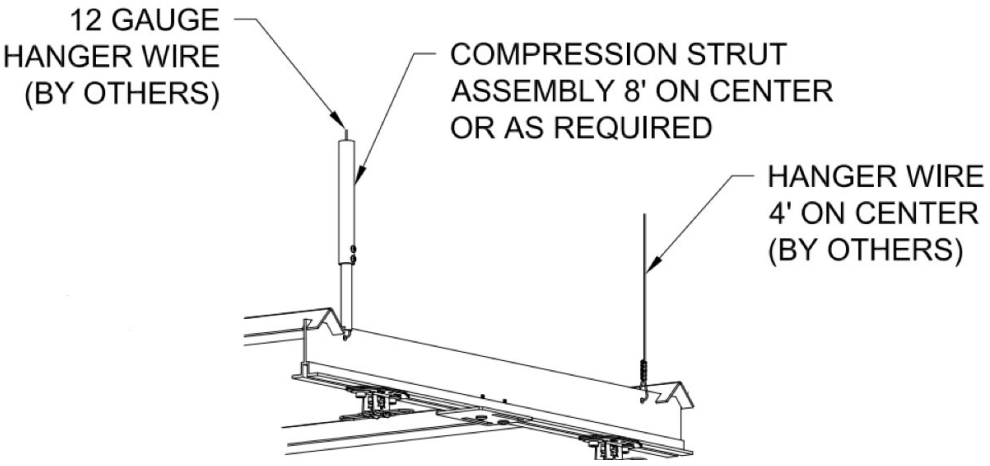

[1] WinLok® Patent No: US 10,113,317; US 11,168,477; US 12,049,758

Step 3:

Connect abutting Main Tees to each other using Main Tee Splice (MTS) Connector Clip. Bend the tabs of the Clip toward the ends of the Main Tees using finger pressure to start, and then pinch flat using pliers.

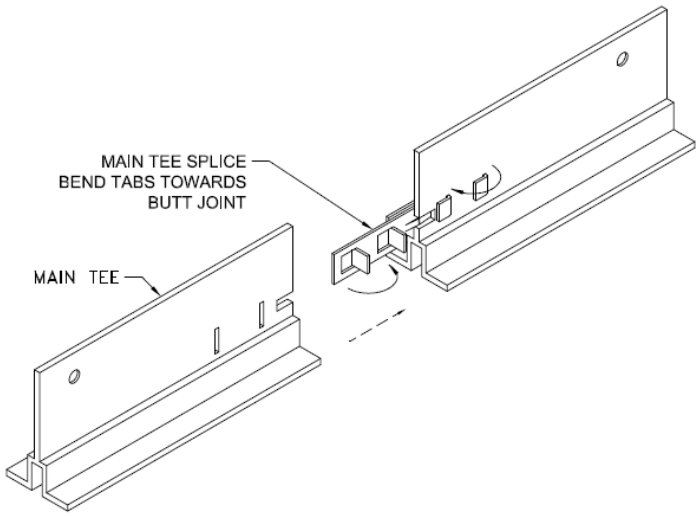

Step 4:

NOTE: Main Tees are provided in 12' stock lengths to be field cut at perimeters.

Cutting the [1]WinLok® Tees requires:

a) Radial Arm of Chop Saw capable of 3,400 R.P.M.
b) A minimum of 12" diameter blade with Carbide Tipped "Ply-Teeth"
c) A metal cutting Wax Stick as a Lubricant
d) A 12' run-out table aligned with the saw to assure square cuts.

Step 5:

Use Stabilizer Angles to position and properly space Parallel Main Tees. Stabilizer Angles should be spaced no greater than 6' O.C.

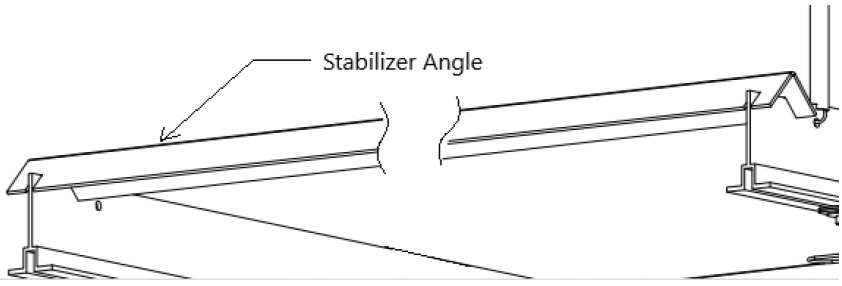

[1] WinLok® Patent No: US 10,113,317; US 11,168,477; US 12,049,758

Step 6:

Using an 1/8" Hex Screwdriver Bit, connect [1]WinLok® Clips to the Main Tees per the approved Shop Drawings using ¼-20 Shoulder Bolts and Washers. Clips can be aligned across the ceiling from Main Tee to Main Tee by using a Laser Level.

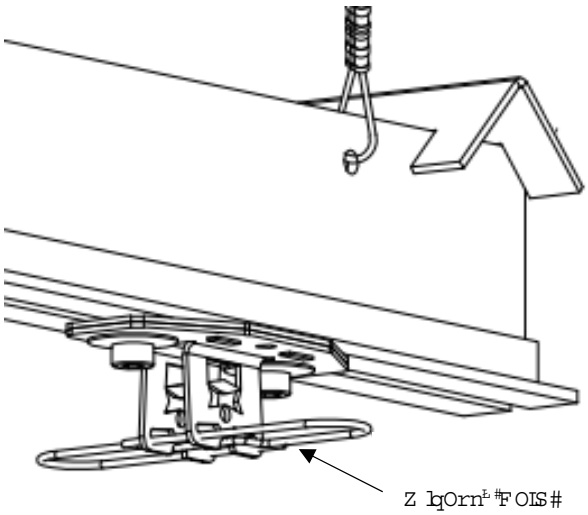

Step 7:

Position the Torsion Spring Plates (used for Vertical Torsion Springs to act as a Lanyard) per the approved Submittal Drawings. Using a #2 Phillips Screwdriver Bit, connect the Torsion Spring Plates to the bottom of the Main Tees using two (2) ¼-20 Bolts.

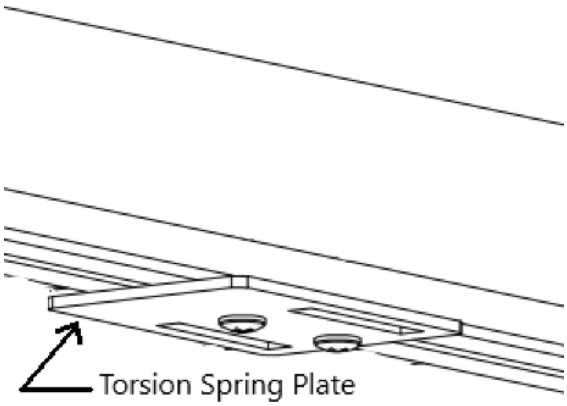

[1] WinLok® Patent No: US 10,113,317; US 11,168,477; US 12,049,758

Step 8:

Install the Vertical Torsion Springs (Lanyards) into the end of the Beam Baffle Cassettes by inserting them into the pre-fabricated spring holes.

After installing Vertical Torsion Springs (Lanyards) into Beam Baffle Cassettes, the Beam Baffle Cassettes are ready for installation into the Grid. Start Cassette installation by inserting Vertical Torsion Springs (Lanyards) into the Torsion Plate slots. This Vertical Torsion Spring acts as a Lanyard for safety.

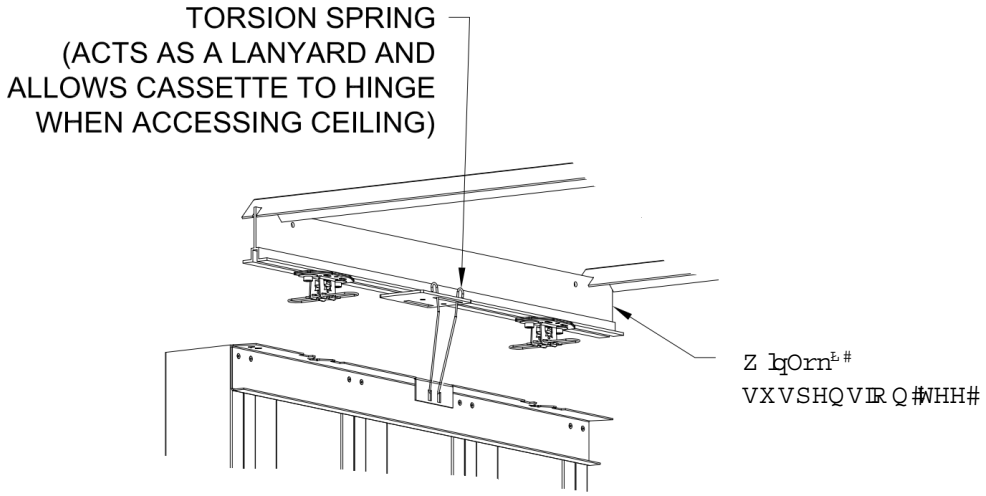

Step 9:

Install the Beam Baffle Cassettes by aligning the notch to the Clip and pushing up until the Cassette snaps into place.

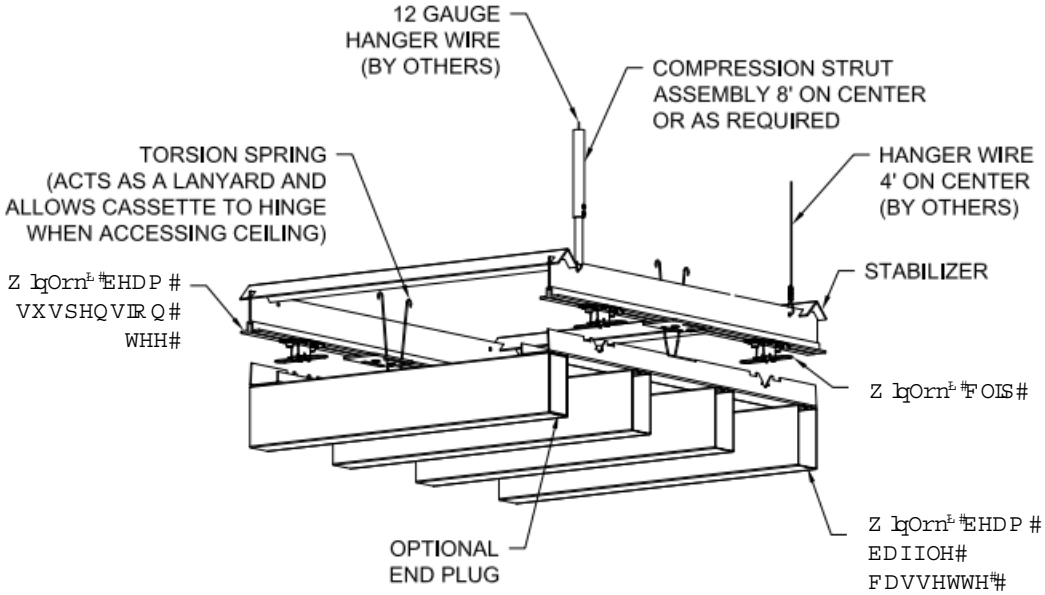

[1] WinLok® Patent No: US 10,113,317; US 11,168,477; US 12,049,758

Enlarged View of Notch and [1]WinLok® Clip:

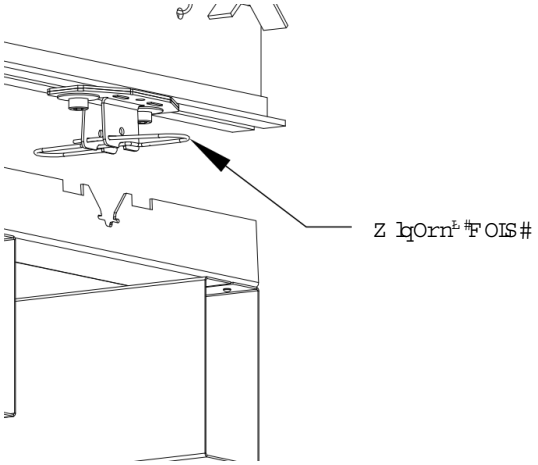

Side View of [1] WinLok® Clip with Cassette Installed:

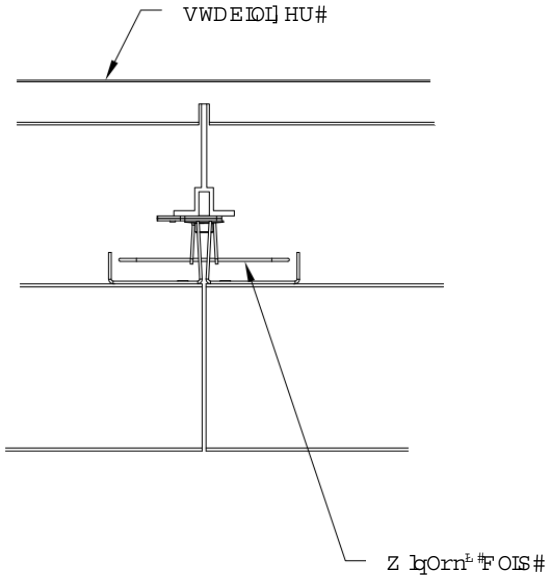

2.04 - CASSETTE REMOVAL SEQUENCE

Step 1:

Slide the [1]WinLok® Panel Removal Tool along the seam to locate the [1]WinLok® Clips.

[1] WinLok® Patent No: US 10,113,317; US 11,168,477; US 12,049,758

Step 2:

Insert the [1]WinLok® Panel Removal Tool to engage the [1]WinLok® Clip as shown below. Hold up the adjacent Panel while the [1]WinLok® Removal Tool is engaged.

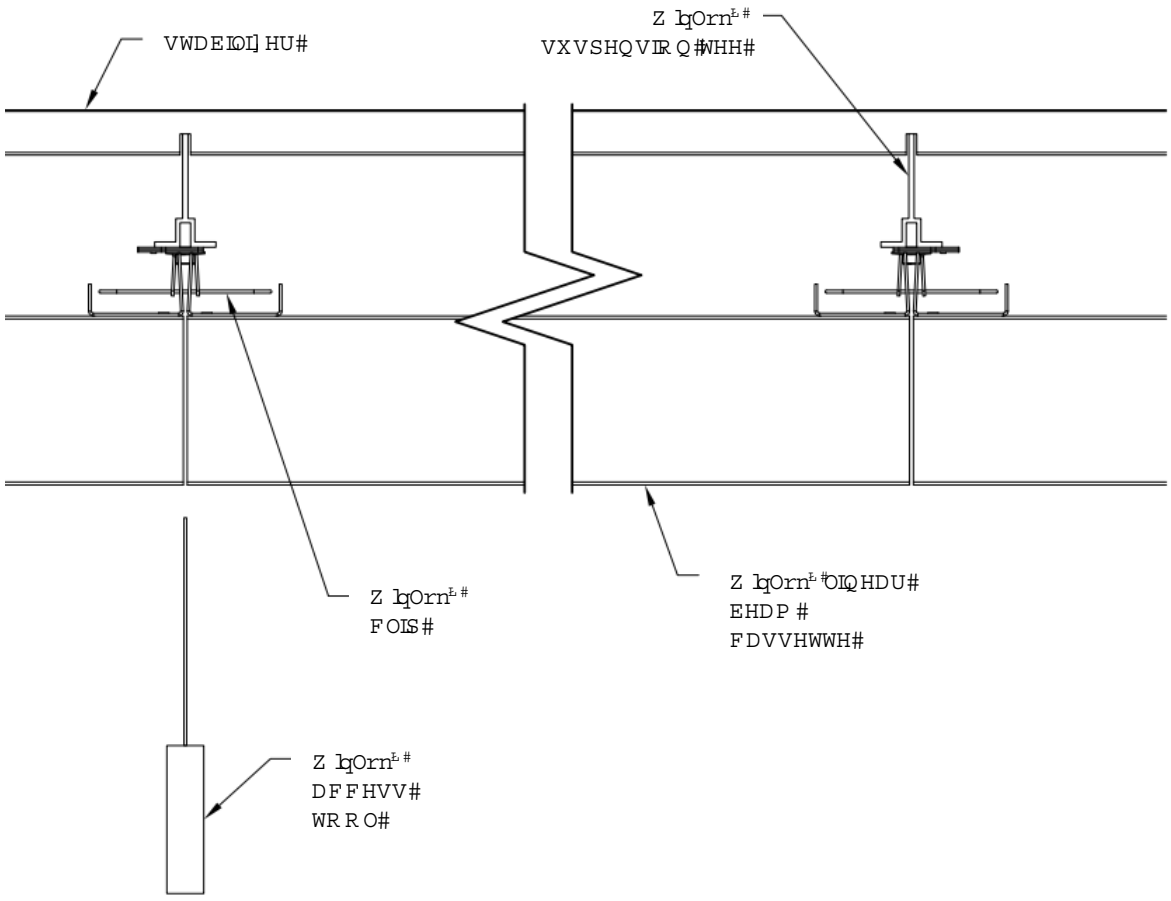

Step 3:

Once all the [1]WinLok® Clips have the [1]WinLok® Removal Tool engaged, pull down the Panel to allow it to hang freely from the Torsion Springs (Lanyards).

[1] WinLok® Patent No: US 10,113,317; US 11,168,477; US 12,049,758

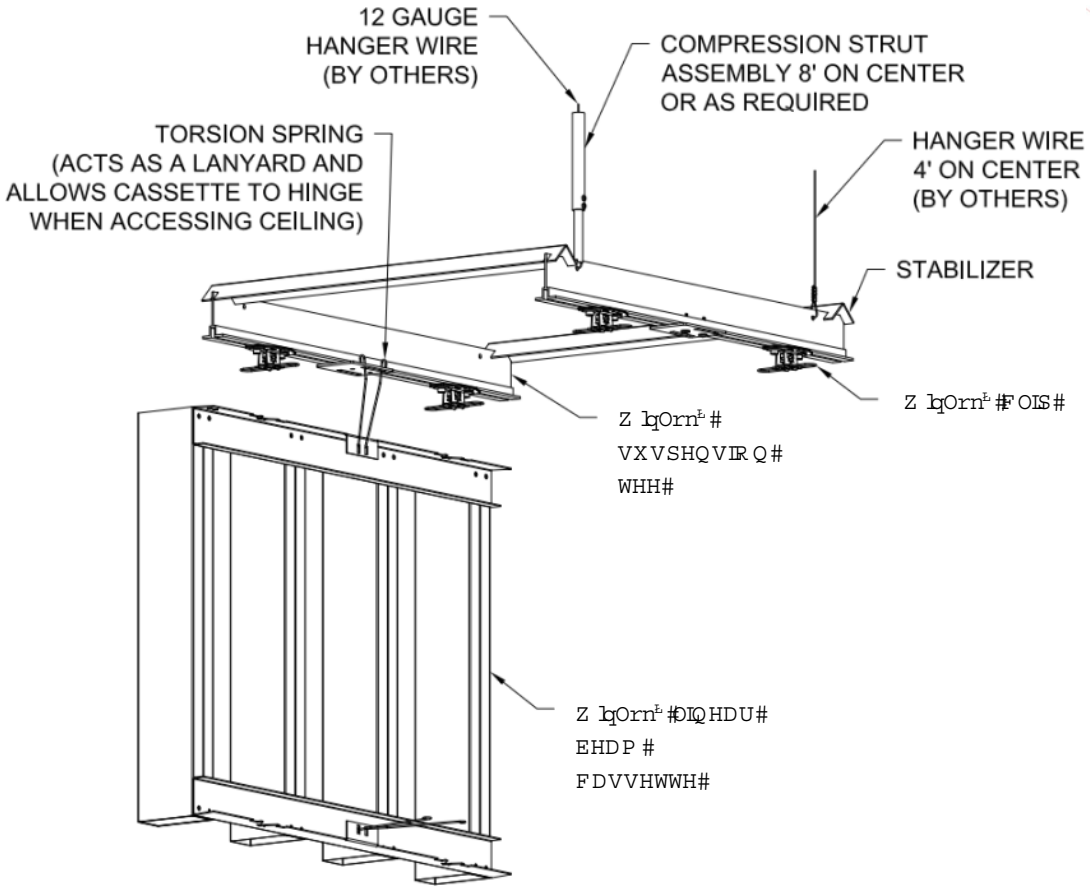

<u>Step 4</u>:

Squeeze the Torsion Spring (Lanyard) together to remove it from the Torsion Plate slot.

GORDON®
ARCHITECTURAL+ENGINEERED SOLUTIONS

5023 Hazel Jones Road
Bossier City, LA 71111
800-747-8954

www.gordon-inc.com
sales@gordon-inc.com