MULLION MATE®

Extruded Aluminum Partition Gap Closure
Mullion Mate® Plus
U.S. Patent No. 12,442,181

Installation Instructions

GORDON®
ARCHITECTURAL+ENGINEERED SOLUTIONS

PART 1 - STORAGE AND HANDLING

1. After receiving materials, transfer material immediately to a safe, dry, climate-controlled place where it will not be damaged during storage.
    a. Do not store Gordon, Inc. product or components outdoors.
    b. Store Crates and / or Cartons flat in a dry location away from activity.
    c. Do not store near corrosive material such as acids, salt, fertilizer, etc.
    d. All materials should be protected during site storage to prevent damage to the finished work from other trades.
    e. Store materials inside a well-insulated area, away from concrete and masonry and protected from the weather, moisture, soiling, abrasion, extreme temperatures and humidity.
    f. Protect the strippable protective covering on metal panels from exposure to sunlight, heat, and high humidity.
    g. Store product in Gordon's unopened packaging until installation of product.
    h. Prevent contact with material that may cause discoloration, staining, or corrosion.
    i. Store in flat, fully supported position.
    j. Store to prevent twisting, bending, abrasion, scratching, and denting.
    k. Do not drop or stand containers on edges or corners.
    l. Gordon, Inc. components and systems are not packaged to receive the load of any other material stored or stacked upon it. Therefore, DO NOT DOUBLE STACK OR STORE OTHER MATERIAL on top of the packages or crates.
2. Inspect all material prior to installation. Do not install any substandard or unacceptable material. Gordon, Inc. will not be responsible for the cost of repair or removal, or costs resulting from removal of rejected material, or the installation of replacement material.
3. To avoid lasting deformation of the Mullion Mate® components when exposed to temperature and humidity extremes, store this material at or near room temperature. Allow a minimum of 48 hours for the product to adjust to internal room temperature and humidity conditions before installing the Mullion Mate®.
4. Material should be cleaned thoroughly prior to installation.

PART 2 - INSTALLATION

Mullion Mate® is designed to be easily installed and field cut to fit varying job conditions between curtain wall and partition wall. Mullion Mate® can be installed adjacent to a vertical mullion. The installation instructions are written for a finished partition wall with Mullion Mate® End Caps installed. (For more information on the End Caps contact a Gordon, Inc. service representative. 800-747-8954).

2.01 - APPLICABLE CODES AND STANDARDS FOR INSTALLATION

1. Project Specifications
2. Architect approved Shop Drawings

2.02 - SPECIAL TOOLS REQUIRED

If field cutting is required:

- Fine tooth saw with a blade recommended for cutting aluminum or metal.

- Wax stick or similar lubricant.
- Painters tape/masking applied tape to prevent scratches or damage to area of cut.

2.03 - INSTALLATION OF MULLION MATE® (STEPS 1-5 ARE INSTALLATION INSTRUCTIONS IF FIELD CUTTING IS REQUIRED. IF NOT, START AT STEP 6.)

Prior to installation: For best results, store this material at or near room temperature. This is strongly recommended to avoid lasting deformation of the internal components when exposed to temperature and humidity extremes. Allow a minimum of 48 hours for product to adjust to internal room temperature and humidity conditions.

Step 1:

Do not remove restraining straps prior to cutting (See Figure A).

Step 2:

Use a fine-tooth metal cutting saw blade on a chop saw capable of turning 4,000 rpm. Use a wax stick or similar lubricant on the blade prior to cutting.

Step 3:

To reduce finish damage due to the saw blade, apply masking tape to the Mullion Mate® at the approximate location where you are cutting and draw the cut line on the tape.

Step 4:

Make the cut and remove the masking tape.

Step 5:

Use optional touch-up kit as needed if the material is painted.

Step 6:

Mullion Mate® is typically shipped with factory applied gasket on either side of the component. The gasket has a release sheet on one side that must be removed to secure Mullion Mate® to the adjacent building components. This provides a plumb and firmly secured closure. Peel back several inches of the release sheet. Bend release sheet downward and toward the installer.

Step 7:

Move Mullion Mate® to the opening and align plumb with the center of the partition wall end cap.

Step 8:

Remove the top paper retaining strap and begin removing the release sheets on the gaskets. Continue to remove the release sheets and straps until Mullion Mate® fills the void. Make sure Mullion Mate® remains plumb while removing the release sheets and straps.

2.04 - FIELD NOTCHING MULLION MATE® (IF NEEDED)

Step 1:

Occasionally features of the exterior wall such as a horizontal mullion may require field notching. First, take detailed measurements of the horizontal mullion(s).

Dissassemble the two Mullion Mate® halves by cutting the paper retaining straps, careful not to cut or scratch the exposed faces of the Mullion Mate®.

Step 2:

Transfer the notch outline to the Mullion Mate® using a Sharpie Ultra Fine Point marker.

Step 3:

Use a jig saw with a fine tooth blade for cutting metal. Make the cut following the layout lines. A relief cut or several relief cuts will be required for the verical cut.(arching the blade path to the straight layout line before making the straight cut.)

Step 4:

Reassemble the two halves after making the required cuts.

Step 5:

Compress to a width narrower than the opening size. Wrap paper around the Mullion Mate® at center and close to the ends. Wrap masking tape around the Mullion Mate® at the paper locations. Follow Steps 6 – 8 in Section 2.03 for installation.

2.05 - FIELD SPLICING MULLION MATE® (IF NEEDED)

Step 1:

When the length of the Mullion Mate® assembly is longer than 16', it will be supplied in two (2) sections; One (1) long section and one (1) short supplementing section that is to be assembled in the field.

Step 2:

Each section of Mullion Mate® will have a splice plate installed. One (1) splice is about ¼'' longer than the other. This allows you to insert one (1) side into the splice groove of the opposite section, and then align the remaining side with the corresponding groove in the other side.

Step 3:

Once the two (2) splices are engaged, the sections will be fully pushed into each other. Now you will drill 1/8'' holes at the center of the face about 1'' from the edge (if they are not already present). Insert the rivets and crimp.

Step 4:

The gasket must be applied after the supplemental section is spliced and riveted, taking care to butt the gaskets and not overlap them. Peel the backing off the overhanging piece of gasket and adhere the final few inches of gasket to the extrusions.

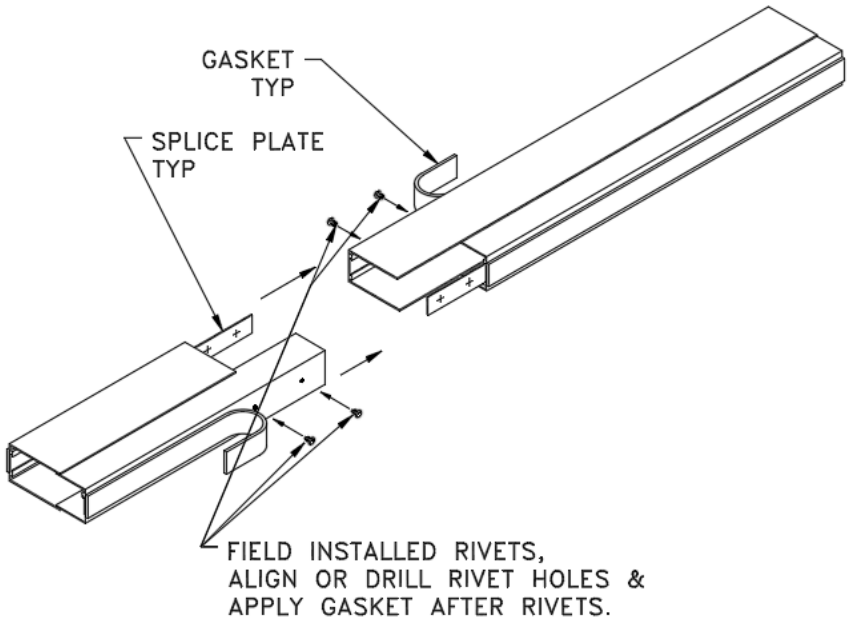

2.06 – FIELD PAINTABLE MULLION MATE® (IF REQUIRED)

Field painting Mullion Mate® can be achieved with either a field built kit of parts or a factory assembled unit. Contact the factory to determine which product will work best for you.

Refer to the following procedure if the Mullion Mate® will be painted in the field, after installation.

FIELD PAINTABLE FACTORY ASSEMBLED MULLION MATE®

The following procedure will outline the steps necessary to successfully field paint Mullion Mate® as manufactured by Gordon, Inc. It is important to note that this process is intended for parts and assemblies that are installed in the *interior* of a building or space.

The first determination that will need to be made when considering field painting is how the paint will be applied. Spray painting typically yields the best consistency and results, but either requires the parts to be coated before installation or masking the surrounding areas to protect them from overspray. This decision is typically made based on the time required and complexity of parts to be coated. Manual applications with brushes, rollers, or pads are also an acceptable alternative if spraying is not practical.

Once application and paint is selected, the paint supplier will provide Technical Data Sheets that will give instruction on how to use their product, and most likely, how to prepare the parts for coating.

In the absence of an application procedure provided by the manufacturer, the steps listed below are a useful guide for successfully applying paint to aluminum parts in the field. These steps are written to address the mill finish and anodized parts provided by Gordon, Inc. Parts that originate from other manufacturers may not be compatible with this procedure.

Step 1:

Install the Mullion Mate® per instructions as described herein in Section 2.03.

Step 2:

After the Mullion Mate® is securely installed and the double sided gasket tape is adhered to both walls, painting can begin.

Note: Mullion Mate® is designed to expand and contract as the exterior wall moves independently from the interior wall. Take consideration that the paint is reaching far enough into the joint of the two Mullion Mate® extrusion profiles.

Step 3:

The first step in preparing the surface to be coated is to clean the surface of all soils including dirt, dust, oil, or any foreign substance that may impair adhesion of the newly

applied paint. This can be done with a white microfiber towel and an acceptable cleaning solvent such as denatured alcohol or equivalent. Always follow safety instructions when using solvents for cleaning as they are typically dangerous to inhale and are generally flammable.

Step 4:

Once the part is cleaned, then the surface can be abraded for promoting mechanical adhesion. This is most effectively accomplished with sandpaper either by means of a power sander or by hand. For spray applications of liquid paint, sanding should be performed with 400 grit paper. The reason for using this grit is that the scratches produced from sanding can easily be filled in by the paint. It is important to concentrate this effort primarily on the areas that will be seen after installation. It is also recommended to dry wipe the metal being sanded periodically during the sanding step. This will help remove any debris that could cause deep scratches to form during sanding.

Step 5:

Inspect the sanding job thoroughly. Any areas that do not look well sanded can be fixed at this time. Remember, this step is directly responsible for how well the paint will adhere to the parts.

Step 6:

After the parts have been satisfactorily sanded, they should be wiped down again with denatured alcohol to remove sanding residue. This should be repeated until the wiping cloth stops removing residue.

Step 7:

Following the paint manufacturer's handling instructions, go ahead and prepare the paint for application. Make sure that all safety precautions are followed. Most paints contain aromatic solvents which are not healthy to breathe and are also typically flammable. Always use appropriate PPE when painting, especially indoors where ventilation is limited.

Step 8:

It is generally best practice to paint something using a series of light coats with appropriate tacking-time in between coats. The manufacturer's instructions should address this adequately.

Step 9:

Allow ample dry time after the last coat is applied for best results. For most paints, this process usually takes about 24-72 hours to achieve full cure. This is when the properties of the paint are fully realized.

After the paint has dried fully, inspect the parts, and confirm that the quality meets expectation. Should there be any defect in the parts, they can be sanded and repainted

using the same steps from above. Small chips or defects can be touched-up using a small artist paint brush by hand.

Step 10:

If desired, caulk the joints at the edge of the double sided gasket tapes.

If you have any questions about field painting components from Gordon, Inc. please call your sales representative. One of our technical representatives can be deployed to help you with your painting questions.

FIELD PAINTABLE MULLION MATE® KIT OF PARTS

Refer to the following procedure if the Mullion Mate® will be painted in the field, prior to installation.

Step 1:

The Mullion Mate® has been shipped disassembled and ready for field painting. The shipment includes the aluminum extrusion profiles, internal sound insulation foam, and a roll(s) of double sided adhesive gasket. Locate the aluminum extrusions and apply coating as required.

Step 2:

Follow the applicator's instructions to coat the aluminum extrusions.

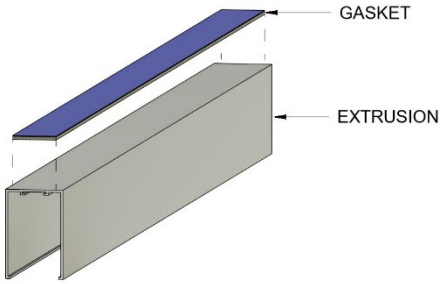

Step 3:

After coating the aluminum extrusions, lay one down on a flat table, with the open side facing down. Locate the roll(s) of double sided gasket tape. Starting flush at one end, begin neatly adhering the gasket tape to the aluminum extrusion, ensuring the tape is applied straight. Apply the gasket tape to all of the aluminum extrusions.

Step 4:

Insert the sound insulation foam, butting each piece to the previous one to ensure there is no gap between them. Trim the foam if it is extending out beyond either end of the aluminum extrusion.

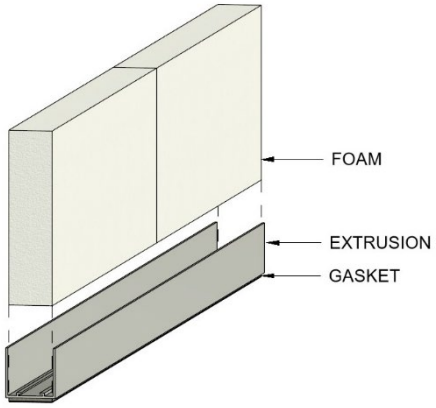

Step 5:

Place the mating aluminum extrusion on top of the sound insulation foam. The assembly is ready for compression.

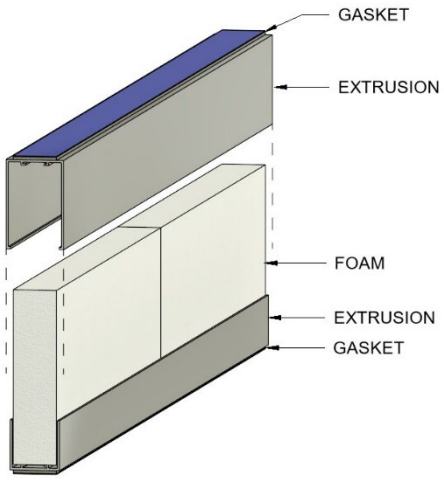

Step 6:

Use clamps to compress the foam so that the distance from the two gasket faces is less than the width of the gap where the Mullion Mate® is to be installed (overall distance between the partition wall and face of the mullion or glazing it will abut to).

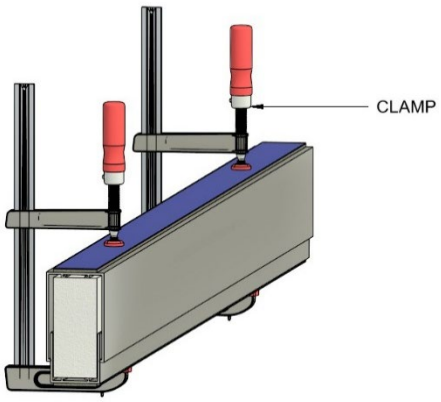

Step 7:

With the foam compressed by the clamps, secure the Mullion Mate® assembly with zip ties (provided). Use one zip tie for every 2 feet. Ensure the heads of the zip ties are all on the same side of the Mullion Mate® assembly. Note: The 2" wide extrusion should abut the Window Mullion.

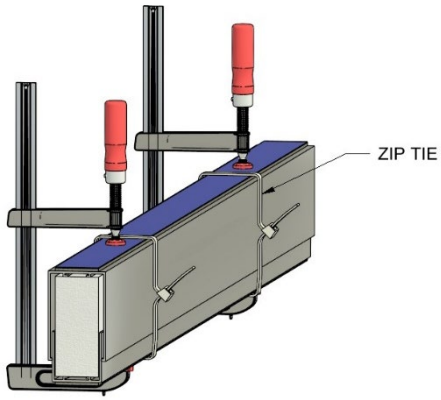

Step 8:

Peel the first few inches of the gaskets' release sheets out so they can be accessed after the Mullion Mate® has expanded. Position the compressed Mullion Mate® between the exterior wall and the end of the interior partition, ensuring it is plumb and aligned with the center of the partition wall.

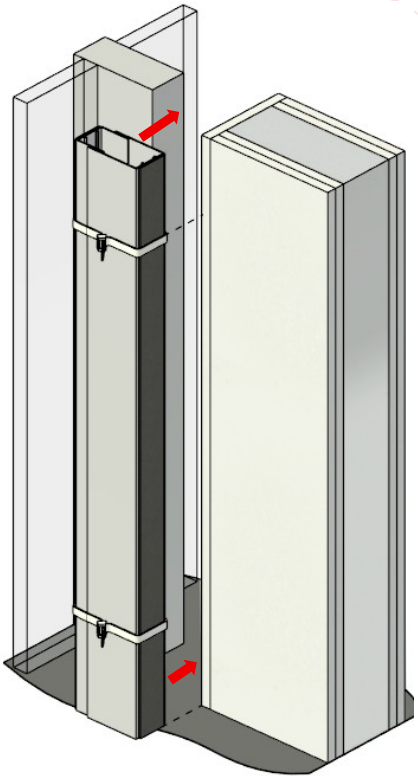

Step 9:

Remove the zip tie and begin removing the release sheets on the gaskets. Continue to remove the release sheets and zip ties until Mullion Mate® expands to fill the void. Make sure Mullion Mate® remains plumb while removing the release sheets and straps. Remove the zip ties carefully without scratching the face of the Mullion Mate®.

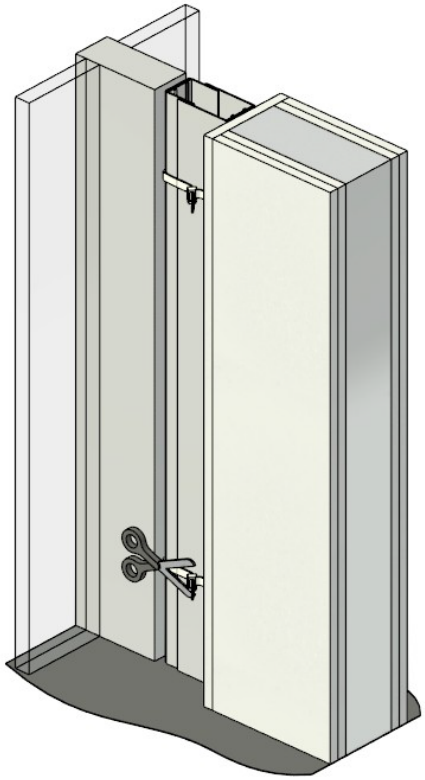

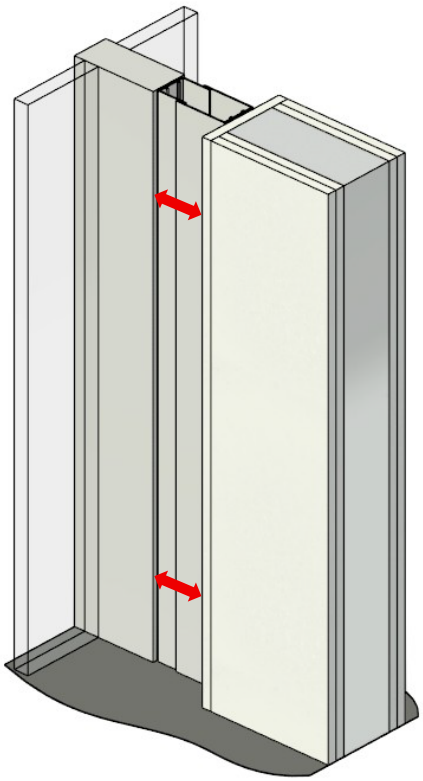

2.07 - REMOVAL AND REINSTALLATION OF MULLION MATE® (IF REQUIRED)

Step 1:

In order to remove your installed Mullion Mate®, you must cut through the gasket on both ends of the Mullion Mate® since the gasket has an adhesive that attaches it to the Mullion Mate® and the wall/window.

Step 2:

Once the gasket has been cut, compress the Mullion Mate® to disengage. Care should be given to ensure that the Mullion Mate® does not spring open.

Step 3:

Once removed, tape the Mullion Mate® together in order to keep it from springing open.

Step 4:

Use a blade to remove the gasket residue from the window/wall as well as the Mullion Mate®.

Step 5:

Reapply a new gasket to the Mullion Mate® prior to reinstalling. Contact the factory for new gasket if required.

PART 3 – ILLUSTRATIONS

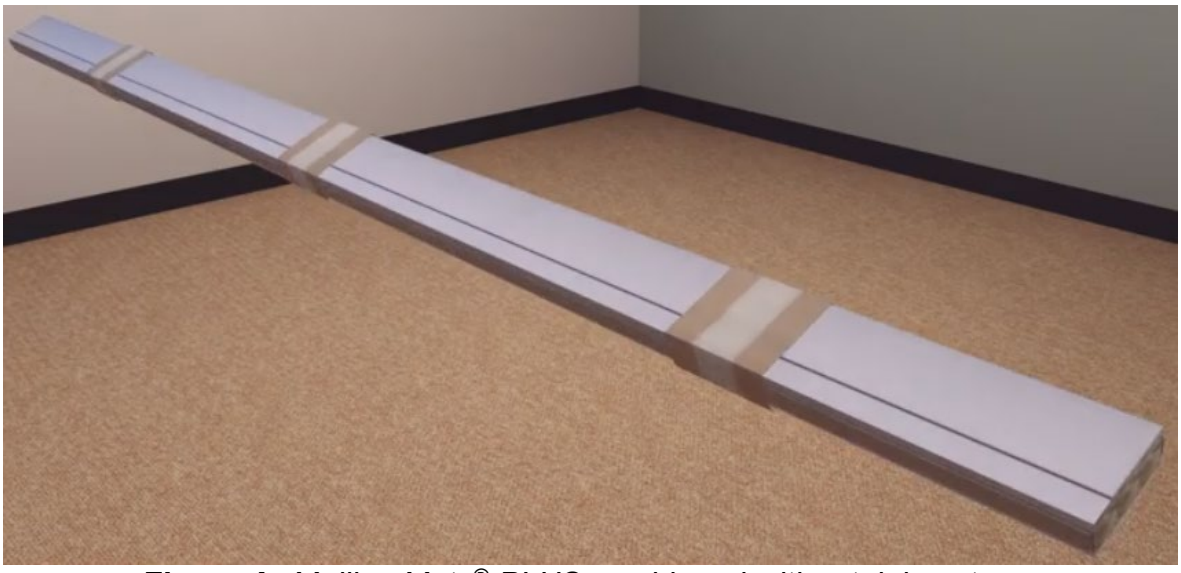

Figure A: *Mullion Mate® PLUS as shipped with retaining straps*

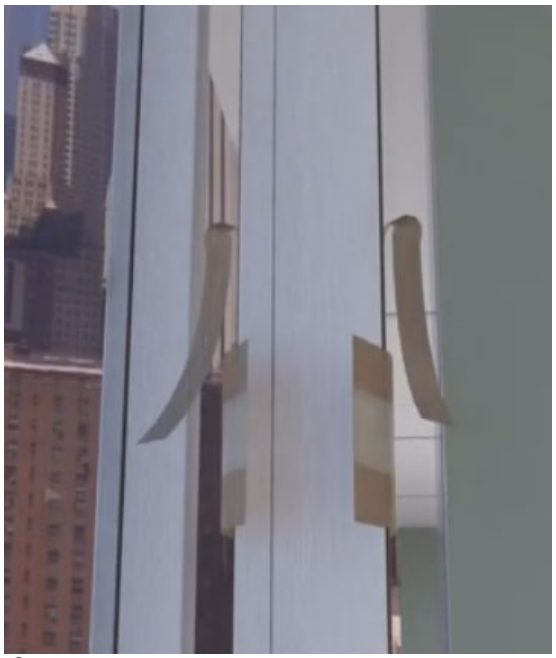

Figure B: *Mullion Mate® PLUS in location removing gasket release sheet and strap*



Figure C: *Installed Mullion Mate® PLUS against mullion and partition*

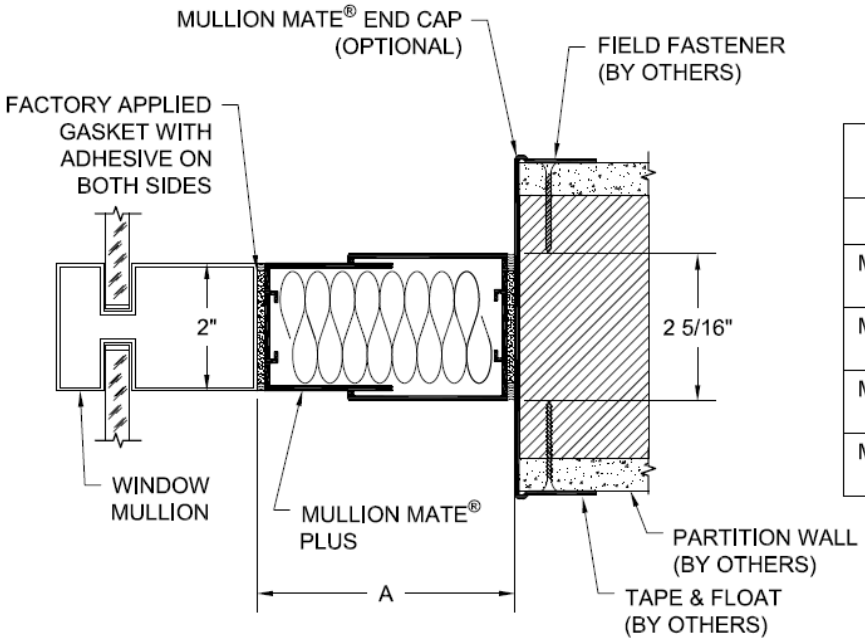

MULLION MATE® SIZING	
PRODUCT	DIM "A"
MULLION MATE® PLUS - 2	2" TO 2-15/16"
MULLION MATE® PLUS - 3	3" TO 3-15/16"
MULLION MATE® PLUS - 4	4" TO 4-15/16"
MULLION MATE® PLUS - 5	5" TO 6-15/16"

Figure D: *Section of Mullion Mate® PLUS between mullion and partition*

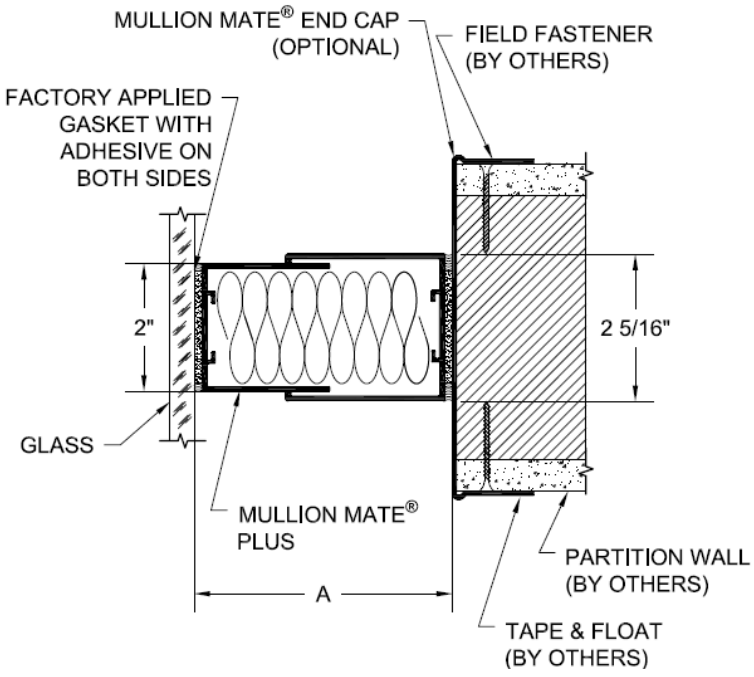

MULLION MATE® SIZING	
PRODUCT	DIM "A"
MULLION MATE® PLUS - 2	2" TO 2-15/16"
MULLION MATE® PLUS - 3	3" TO 3-15/16"
MULLION MATE® PLUS - 4	4" TO 4-15/16"
MULLION MATE® PLUS - 5	5" TO 6-15/16"

WALL-TO-GLASS APPLICATION
MULLION MATE® IS INSTALLED AGAINST MINIMUM 1/8" THICK GLASS. INSTALL THE GASKET AGAINST THE GLASS SIDE FIRST. CARE SHOULD BE GIVEN TO PROPERLY POSITION GASKET PRIOR TO CONTACTING GLASS.

Figure E: *Section of Mullion Mate® PLUS between glazing and partition*

Cutting Mullion Mate® to Length

Notching Mullion Mate®

Mullion Mate® - Plus & Pro

Gordon, Inc.

Intertek

CONTROL NO. 5028293

CERTIFIED TO:
ASTM E1399/E1399M - 97

Refer to the Intertek Directory of Building Products
(https://bpdirectory.intertek.com) for detailed information.

GORDON®
ARCHITECTURAL+ENGINEERED SOLUTIONS

5023 Hazel Jones Road
Bossier City, LA 71111
800-747-8954

www.gordon-inc.com
sales@mullionmate.com