MULLION MATE®

Extruded Aluminum Partition Gap Closure
Mullion Mate® Pro
U.S. Patent No. 12,024,881; U.S. Patent No. 12,442,181

Installation Instructions

GORDON®
ARCHITECTURAL+ENGINEERED SOLUTIONS

PART 1 - STORAGE AND HANDLING

1. After receiving materials, transfer material immediately to a safe, dry, climate-controlled place where it will not be damaged during storage.
    a. Do not store Gordon, Inc. product or components outdoors.
    b. Store Crates and / or Cartons flat in a dry location away from activity.
    c. Do not store near corrosive material such as acids, salt, fertilizer, etc.
    d. All materials should be protected during site storage to prevent damage to the finished work from other trades.
    e. Store materials inside a well-insulated area, away from concrete and masonry and protected from the weather, moisture, soiling, abrasion, extreme temperatures and humidity.
    f. Protect the strippable protective covering on metal panels from exposure to sunlight, heat, and high humidity.
    g. Store product in Gordon's unopened packaging until installation of product.
    h. Prevent contact with material that may cause discoloration, staining, or corrosion.
    i. Store in flat, fully supported position.
    j. Store to prevent twisting, bending, abrasion, scratching, and denting.
    k. Do not drop or stand containers on edges or corners.
    l. Gordon, Inc. components and systems are not packaged to receive the load of any other material stored or stacked upon it. Therefore, DO NOT DOUBLE STACK OR STORE OTHER MATERIAL on top of the packages or crates.
2. Inspect all material prior to installation. Do not install any substandard or unacceptable material. Gordon, Inc. will not be responsible for the cost of repair or removal, or costs resulting from removal of rejected material, or the installation of replacement material.
3. To avoid lasting deformation of the Mullion Mate® components when exposed to temperature and humidity extremes, store this material at or near room temperature. Allow a minimum of 48 hours for the product to adjust to internal room temperature and humidity conditions before installing the Mullion Mate®.
4. Material should be cleaned thoroughly prior to installation.

PART 2 - INSTALLATION

Mullion Mate® PRO is designed to be easily installed and field cut to fit varying job conditions between curtain wall glazing and partition wall. Mullion Mate® PRO is installed adjacent to a vertical mullion. The installation instructions are written for a finished partition wall with Mullion Mate® End Caps installed. (For more information on the End Caps contact a Gordon, Inc. service representative. 800-747-8954).

2.01 - APPLICABLE CODES AND STANDARDS FOR INSTALLATION

1. Project Specifications
2. Architect approved Shop Drawings

2.02 - SPECIAL TOOLS REQUIRED

If field cutting is required:

- Fine tooth saw with a blade recommended for cutting aluminum or metal.
- Wax stick or similar lubricant.

- Painters tape/masking applied tape to prevent scratches or damage to area of cut.

2.03 - INSTALLATION OF MULLION MATE® PRO (STEPS 1-5 ARE INSTALLATION INSTRUCTIONS IF FIELD CUTTING IS REQUIRED. IF NOT, START AT STEP 6.)

Prior to installation: For best results, store this material at or near room temperature. This is strongly recommended to avoid lasting deformation of the internal components when exposed to temperature and humidity extremes. Allow a minimum of 48 hours for product to adjust to internal room temperature and humidity conditions.

Step 1:

Do not remove restraining straps prior to cutting (See Figure A).

Step 2:

Use a fine-tooth metal cutting saw blade on a chop saw capable of turning 4,000 rpm. Use a wax stick or similar lubricant on the blade prior to cutting.

Step 3:

To reduce finish damage due to the saw blade, apply masking tape to the Mullion Mate® at the approximate location where you are cutting and draw the cut line on the tape.

Step 4:

Make the cut and remove the masking tape.

Step 5:

Use optional touch-up kit as needed if the material is painted.

Step 6:

Mullion Mate® is typically shipped with factory applied gasket on either side of the component. The gasket has a release sheet on one side that must be removed to secure Mullion Mate® to the adjacent building components. This provides a plumb and firmly secured closure. Peel back several inches of the release sheet. Bend release sheet downward and toward the installer.

Step 7:

Move Mullion Mate® to the outside of the window mullion and align the edge of the Mullion Mate® with the edge of the partition wall end cap.

Step 8:

Remove the top paper retaining strap and begin removing the release sheets on the gaskets. Continue to remove the release sheets and straps until Mullion Mate® fills the void. Make sure Mullion Mate® remains aligned with the edge of the partition wall while removing the release sheets and straps

Step 9:

Repeat Steps 6-8 on the other side of window mullion and align with the other side's edge of partition wall when installing.

2.04 - FIELD NOTCHING MULLION MATE® (IF NEEDED)

Step 1:

Occasionally features of the exterior wall such as a horizontal mullion may require field notching. First, take detailed measurements of the horizontal mullion(s).

Dissassemble the two Mullion Mate® halves by cutting the paper retaining straps, careful not to cut or scratch the exposed faces of the Mullion Mate®.

Step 2:

Transfer the notch outline to the Mullion Mate® using a Sharpie Ultra Fine Point marker.

Step 3:

Use a jig saw with a fine tooth blade for cutting metal. Make the cut following the layout lines. A relief cut or several relief cuts will be required for the vertical cut.(arching the blade path to the straight layout line before making the straight cut.)

Step 4:

Reassemble the two halves after making the required cuts.

Step 5:

Compress to a width narrower than the opening size. Wrap paper around the Mullion Mate® at center and close to the ends. Wrap masking tape around the Mullion Mate® at the paper locations. Follow Steps 6 – 8 in Section 2.03 for installation.

2.05 - FIELD SPLICING MULLION MATE® (IF NEEDED)

Step 1:

When the length of the Mullion Mate® assembly is longer than 16', it will be supplied in two (2) sections; One (1) long section and one (1) short supplementing section that is to be assembled in the field.

Step 2:

Each section of Mullion Mate® will have a splice plate installed. One (1) splice is about ¼'' longer than the other. This allows you to insert one (1) side into the splice groove of the opposite section, and then align the remaining side with the corresponding groove in the other side.

Step 3:

Once the two (2) splices are engaged, the sections will be fully pushed into each other. Now you will drill 1/8'' holes at the center of the face about 1'' from the edge (if they are not already present). Insert the rivets and crimp.

Step 4:

The gasket must be applied after the supplemental section is spliced and riveted, taking care to butt the gaskets and not overlap them. Peel the backing off the overhanging piece of gasket and adhere the final few inches of gasket to the extrusions.

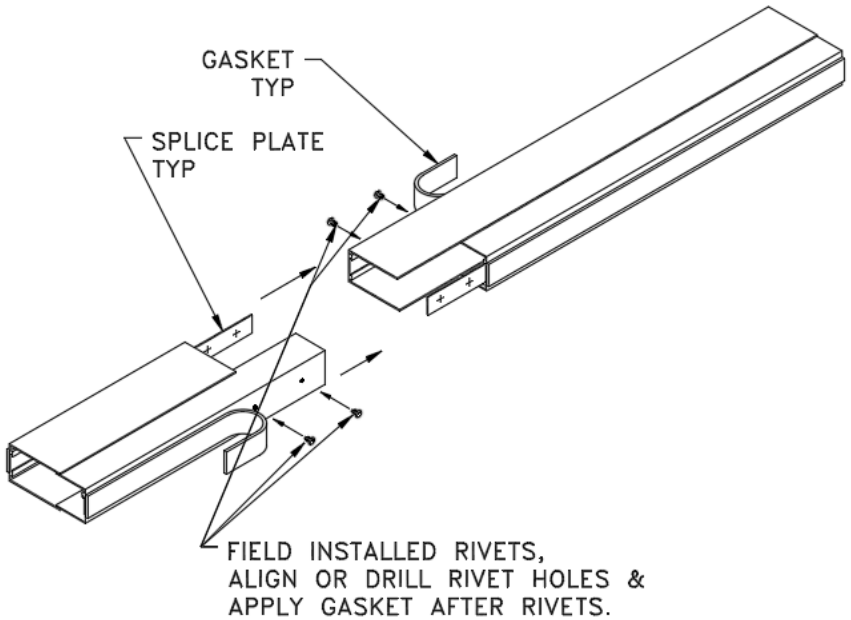

2.06 - REMOVAL AND REINSTALLATION OF MULLION MATE® (IF NEEDED)

Step 1:

In order to remove your installed Mullion Mate®, you must cut through the gasket on both ends of the Mullion Mate® since the gasket has an adhesive that attaches it to the Mullion Mate® and the wall/window.

Step 2:

Once the gasket has been cut, compress the Mullion Mate® to disengage. Care should be given to ensure that the Mullion Mate® does not spring open.

Step 3:

Once removed, tape the Mullion Mate® together in order to keep it from springing open.

Step 4:

Use a blade to remove the gasket residue from the window/wall as well as the Mullion Mate®.

Step 5:

Reapply a new gasket to the Mullion Mate® prior to reinstalling. Contact the factory for new gasket if needed.

PART 3 – ILLUSTRATIONS

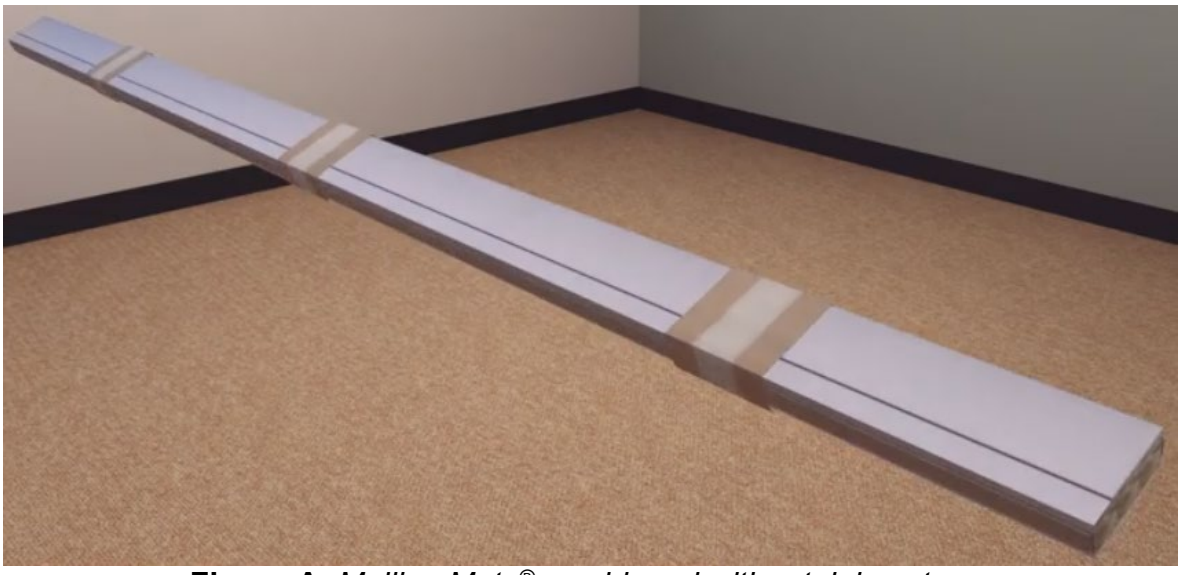

Figure A: *Mullion Mate® as shipped with retaining straps*

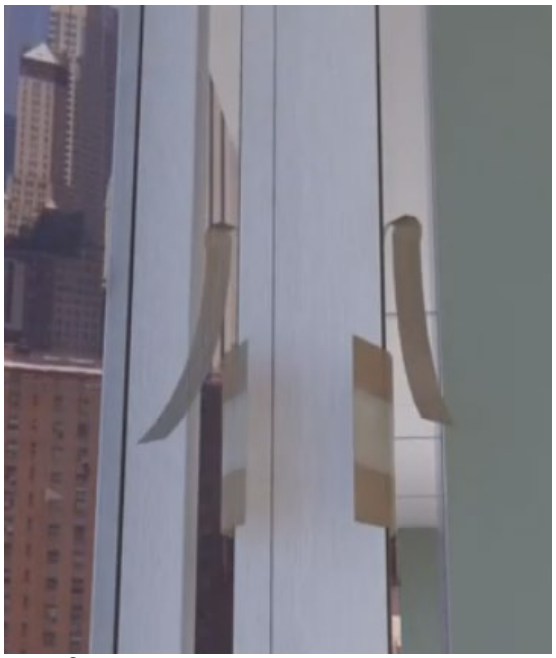

Figure B: *Mullion Mate® in location removing gasket release sheet and strap*

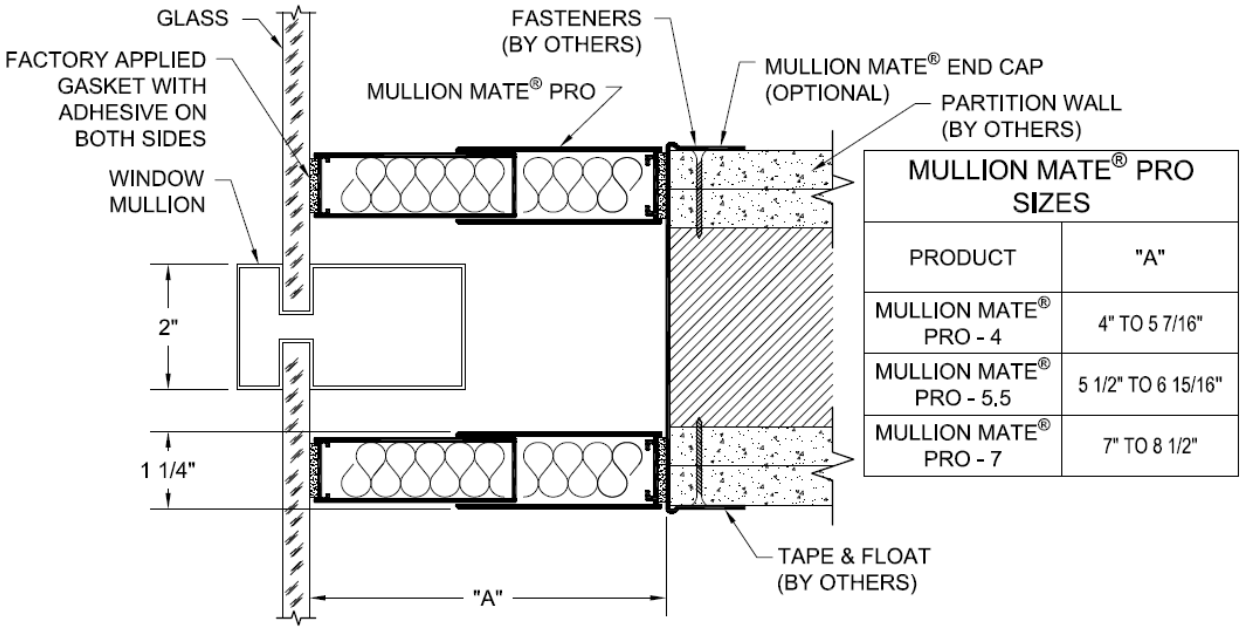

Figure C: *Section of Mullion Mate® Pro between glazing and partition*

PART 4 – FIELD PAINTING OF MILL FINISH OR ANODIZED ALUMINUM

The following procedure will outline the steps necessary to successfully field-paint components manufactured by Gordon, Inc. It is important to note that this process is intended for parts and assemblies that are installed in the interior of a building or space. Field painting of exterior-placed components must yield to many other variables such as weather and sun exposure when considering the durability of the finished product.

The first determination that will need to be made when considering field painting is how the paint will be applied. Spray painting typically yields the best consistency and results, but either requires the parts to be coated before installation or masking the surrounding areas to protect them from overspray. This decision is typically made based on the time required and complexity of parts to be coated. Manual applications with brushes, rollers, or pads are also an acceptable alternative if spraying is not practical.

Once the application technique is determined, then the paint needs to be selected. The selection process can be a daunting one, to be sure. Many things must be considered: color, gloss, smoothness, maintenance, chemistry of coating, etc. Finding a reputable paint supplier and discussing the project will usually make light work of this decision. Be sure to include all factors associated with your project so that your paint supplier can make the best recommendation. Once the paint is selected, the supplier will provide Technical Data Sheets that will give instruction on how to use their product, and most likely, how to prepare the parts for coating.

In the absence of an application procedure provided by the manufacturer, the steps listed below are a good guide for successfully applying paint to aluminum parts in the field. These steps are

written to address the mill finish and anodized parts provided by Gordon, Inc. Parts that originate from other manufacturers may not be compatible with this procedure.

Step 1:

The first step in preparing the surface to be coated is to clean the surface of all soils including dirt, dust, oil, or any foreign substance that may impair adhesion of the newly applied paint. This can be done with a white microfiber towel and an acceptable cleaning solvent such as denatured alcohol or equivalent. Always follow safety instructions when using solvents for cleaning as they are typically dangerous to inhale and are generally flammable.

Step 2:

Once the part is cleaned, then the surface can be abraded for promoting mechanical adhesion. This is most effectively accomplished with sandpaper either by means of a power sander or by hand. For spray applications of liquid paint, sanding should be performed with 400 grit paper. The reason for using this grit is that the scratches produced from sanding can easily be filled in by the paint. It is important to concentrate this effort primarily on the areas that will be seen after installation. It is also recommended to dry wipe the metal being sanded periodically during the sanding step. This will help remove any debris that could cause deep scratches to form during sanding.

Step 3:

Inspect the sanding job thoroughly. Any areas that do not look well sanded can be fixed at this time. Remember, this step is directly responsible for how well the paint will adhere to the parts.

Step 4:

After the parts have been satisfactorily sanded, they should be wiped down again with denatured alcohol to remove sanding residue. This should be repeated until the wiping cloth stops removing residue.

Step 5:

Following the paint manufacturer's handling instructions, go ahead and prepare the paint for application. For one-component systems this will typically only involve stirring the paint to ensure homogeneity. For two-component paints, follow mixing and combining instructions closely so that the paint will cure properly.

Step 6:

Make sure that all safety precautions are followed. Most paints contain aromatic solvents which are not healthy to breathe as well as flammable. Always use appropriate PPE when painting, especially indoors where ventilation is limited.

Step 7:

It is generally best practice to paint something using a series of light coats with appropriate tacking-time in between coats. The manufacturer's instructions should address this adequately.

Step 8:

Allow ample dry time after the last coat is applied for best results. For most paints, this process usually takes about 24-72 hours to achieve full cure. This is when the properties of the paint are fully realized.

After the paint has dried fully, inspect the parts, and confirm that the quality meets expectation. Should there be any defect in the parts, they can be sanded and repainted using the same steps from above. Small chips or defects can be touched-up using a small artist paint brush by hand.

If you have any questions about field-painting components from Gordon, Inc. please call your sales representative. One of our technical representatives can be deployed to help you with your painting questions.

Mullion Mate® - Plus & Pro

Gordon, Inc.

ETL LISTED US

Intertek

CONTROL NO. 5028293

CERTIFIED TO:
ASTM E1399/E1399M - 97

Refer to the Intertek Directory of Building Products
(https://bpdirectory.intertek.com) for detailed information.

GORDON®
ARCHITECTURAL+ENGINEERED SOLUTIONS

5023 Hazel Jones Road
Bossier City, LA 71111
800-747-8954

www.gordon-inc.com
sales@mullionmate.com